1 FEATURES

- It can be powered by a 3V to 5.5V V_{CC} supply
- Operates up to 500kbps
- Two Drivers and Two Receivers
- Meets or exceeds the Requirements of TIA/EIA-232-F and ITU V.28 standard
- External Capacitors: 4x0.1μF
- Serial pins provide enhanced ESD protection
- Bus I/O protection
  - -- ±8kV IEC 61000-4-2 contact discharge
  - -- ±15kV IEC 61000-4-4 air-gap discharge
  - -- ±15kV HBM ESD
- Accept 5V logic input when 3.3V supply

2 APPLICATIONS

- Industrial PC
- Wired network
- Data center and enterprise computing
- Notebook, Computers
- Handheld device

3 DESCRIPTION

The GM3222E interface chip consists of two-channel drivers, two-channel receivers, and a dual charge-pump circuit. The serial port has ±15kV IEC ESD protection. The GM3222E meets the requirements of TIA/EIA-232-F and provides the electrical interface function between an asynchronous communication controller and the serial-port connector. The internal charge pump of the chip and four small external capacitors support a single power supply of 3V to 5.5V. The GM3222E supports a data signaling rate of up to 500kbit/s.
It can enter shutdown mode which only 1uA by input PWRODMN low.

FUNCTION BLOCK

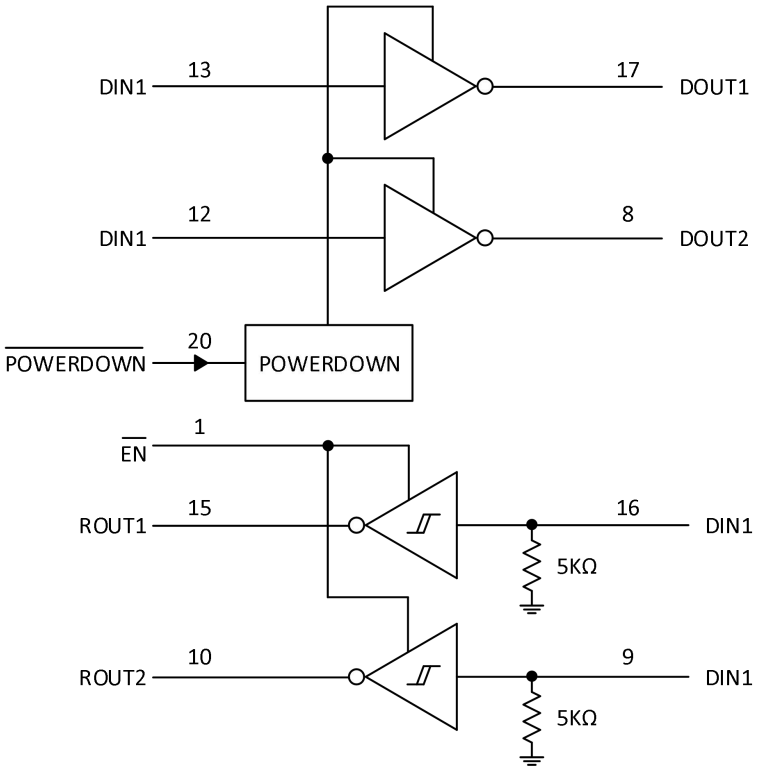

Copyright © GATEMODE Corp.
Tel: (+86) 13135660803
Email: sales@gmmicro.com

4 Pin Configuration and Functions

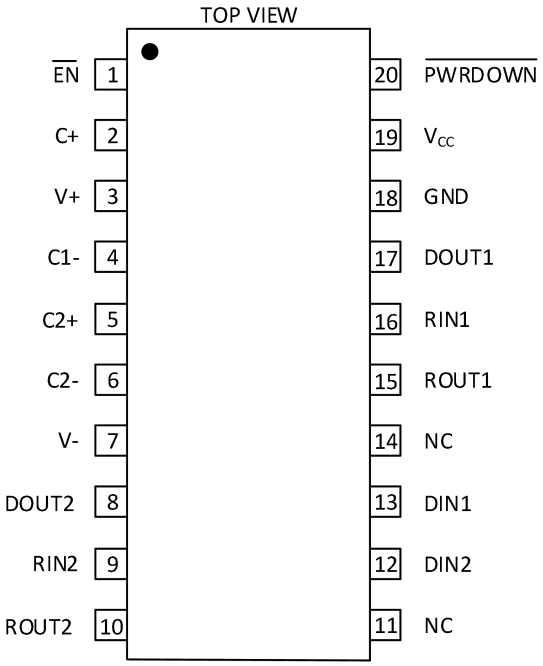

NAME	PIN NO.	DESCRIPTION
C1+	2	Charge pump capacitor pin
C1-	4	Charge pump capacitor pin
C2+	5	Charge pimp capacitor pin
C2-	6	Charge pump capacitor pin
DIN1	13	Driver logic input
DIN2	12	Driver logic input
DOUT1	17	RS-232 driver output
DOUT2	8	RS-232 driver output
$\overline{EN}$	1	Receiver enable,active low
GND	18	Ground
NC	11,14	No internal connection
$\overline{PWRDOWN}$	20	Driver disable,active low
RIN1	16	RS-232 receiver input
RIN2	9	RS-232 receiver input
ROUT1	15	Receiver logic output
ROUT2	10	Receiver logic output
V_{CC}	19	Power Supply
V+	3	Charge pump capacitor pin
V-	7	Charge pump capacitor pin

Copyright © GATEMODE Corp.

5 Sepcifications

5.1 Absolute Maximum Ratings(1)

PARAMETER	PARAMETER		MIN	MAX	UNIT
V_{CC}	Supply Voltage		-0.3	6	V
V+	Positive Output Supply Voltage(2)		-0.3	7	V
V-	Negative Output Supply Voltage(2)		0.3	-7	V
V+~V-	Supply Voltage Difference(2)			13	V
V_I	Input Voltage	Driver input	-0.3	6	V
		Receiver input	-25	25	V
V_O	Output Voltage	Driver output	-13.2	13.2	V
		Receiver output	-0.3	V_{CC}+0.3	V
T_J	Operating virtual junction temperature			150	°C
T_{stg}	Storage temperature range		-65	150	°C

1.Stresses beyond those listed under "absolute maximum ratings" may cause permanent damage to the device. These are stress ratings only, and functional operation of the device at these or any other conditions beyond those indicated under "recommended operating conditions" is not implied. Exposure to absolute-maximum-rated conditions for extended periods may affect device reliability.
2.All voltages are with respect to network GND.

5.2 ESD RATINGS

				TYP	UNIT
$V_{(ESD)}$	Electrostatic Discharge	Human-body model(HBM),per ANSI/ESDA/JEDEC JS-001(1)	All pins except RIN1,RIN2,DOUT1 and DOUT2 pins	±3000	V
			RIN1,RIN2,DOUT1 and DOUT2 pins to GND	±15000	
		Charged device model(CDM),per ANSI/ESDA/JEDEC JS-002(2)	All Pins	±1500	

1：JEDEC document JEP155 states that 500V HBM allows safe manufacturing with a standard ESD control process.
2：JEDEC document JEP157 states that 250V CDM allows safe manufacturing with a standard ESD control process.

5.3 ESD RATINGS - IEC SPECIFICATIONS

PARAMETER		PARAMETER		TYP	UNIT
$V_{(ESD)}$	Electrostatic discharge	IEC 6100-4-2,Contact Discharge(1)	RIN1,RIN2,DOUT1,DOUT2 pins(2)	±8000	V
		IEC 6100-4-2,Air-Gap Discharge(1)		±15000	

1. For PW and DB packages only, a minimum of 1µF capacitor is required between VCC and GND to meet the specified IEC 61000-4-2 rating.
2. For optimized IEC ESD performance for DGS package, the recommendation is to have series resistor (≥ 50Ω), on all logic inputs directly connected to power or ground, to minimize the transient currents going into or out of the logic pins.

5.4 Recommended Application Conditions(2)

PARAMETER		CONDITION		MIN	TYP	MAX	UNIT
	Supply Voltage	V_{CC}=3.3V		3	3.3	3.6	V
		V_{CC}=5V		4.5	5	5.5	V
V_{IH}	Driver Input High Voltage	DIN, $\overline{EN}$, $\overline{PWRDOWN}$	V_{CC}=3.3V	2.0		5.5	V
			V_{CC}=5V	2.4		5.5	V
V_{IL}	Driver Input Low Voltage	DIN, $\overline{EN}$, $\overline{PWRDOWN}$		0		0.8	V
V_I	Receiver Input Voltage	DIN, $\overline{EN}$, $\overline{PWRDOWN}$		-25		25	V
T_{OP}	Operating Temperature			-40		+125	°C

2：C1~C4=0.1µF when V_{CC}=3.3V±0.3V; When V_{CC}=5V±0.5V, C1=0.047µF, C2~C4=0.33µF.

Copyright © GATEMODE Corp.

5.5 Thermal Information

PARAMETER		SSOP	TSSOP	UNIT
$R_{\theta JA}$	Junction-to-ambient thermal resistance	91.0	94.1	°C/W
$R_{\theta JC(top)}$	Junction-to-case (top) thermal resistance	46.2	35.2	°C/W
$R_{\theta JB}$	Junction-to-board thermal resistance	46.1	45.5	°C/W
ψ_{JT}	Junction-to-top characterization parameter	12.3	3.1	°C/W
ψ_{JB}	Junction-to-board characterization parameter	45.6	45.1	°C/W

5.6 Electrical Characteristics(3)

(unless otherwise noted, C1~C4 = 0.1μF at V_{CC} = 3.3V±0.3V; C1 = 0.047μF, C2~C4 = 0.33μF at V_{CC} = 5V±0.5V; T_A =+25°C.)

SYMBOL	PARAMETER	CONDITION		MIN	TYP	MAX	UNIT
DC ELECTRICAL CHARACTERISTIC							
I_{CC}	Supply Current	No load, V_{CC} = 3.3V or 5V			0.3	1.0	mA
I_I	Input leakage current ($\overline{EN}$, $\overline{PWRDOWN}$)				±0.01	±1	μA
Driver							
V_{OH}	High-Level Output Voltage	DOUT at R_L = 3kΩ to GND,DIN = GND		5	5.4		V
V_{OL}	Low-Level Output Voltage	DOUT at R_L = 3kΩ to GND,DIN = V_{CC}			-5.4	-5	
I_{IH}	High-Level Input Current	V_I = V_{CC}			±0.01	±1	μA
I_{IL}	Low-Level Input Current	V_I at GND			±0.01	±1	μA
I_{OS}	Short-Circuit Output Current	V_{CC} = 3.6V, V_O = 0V			±30	±60	mA
		V_{CC} = 5.5V, V_O = 0V					
r_o	Output Resistance	V_{CC}, V+, and V– = 0 V, V_O = ±2V		300	10M		Ω
I_{OZ}	Output leakage current	$\overline{PWRDOWN}$ = GND	V_{CC}=3V to 3.6V,V_O=±12V			±25	μA
			V_{CC}=4.5V to 5.5V,V_O=±10V			±25	μA
RECEIVER							
V_{OH}	High-Level Output Voltage	I_{OH}=-1mA		V_{CC}-0.6	V_{CC}-0.1		V
V_{OL}	Low-Level Output Voltage	I_{OL}=1.6mA			0.1	0.4	mV
V_{IT+}	Positive-Going Input Threshold Voltage	V_{CC}=3.3V			1.4	2.4	V
		V_{CC}=5V			1.7	2.4	
V_{IT-}	Negative-Going Input Threshold Voltage	V_{CC}=3.3V		0.6	1.1		V
		V_{CC}=5V		0.8	1.3		
V_{hys}	Input Hysteresis (V_{IT}+-V_{IT}-)				0.4		V
I_{OZ}	Output leakage current	$\overline{EN}$=1			±0.05	±10	μA
r_i	Input Resistance	V_I = ±3V to ±25V		3	6	8	kΩ

3.Typical Test conditions are at V_{CC}=3.3V or V_{CC}=5V,T_A=25°C.

5.7 SWITCHING CHARACTERISTICS

(unless otherwise noted, C1~C4 = 0.1μF at V_{CC} = 3.3V±0.3V; C1 = 0.047μF, C2~C4 = 0.33μF at V_{CC} = 5V±0.5V; T_A = +25°C.)

Symbol	Parameter	Condition		MIN	TYP	MAX	UNIT
F_{MAX}	Maximum Data Rate	R_L=3kΩ， C_L=1000pF, One Dout switching,see Figure 1			500		kbps
$T_{sk(p)}$	Pulse skew	R_L = 3kΩ to 7kΩ, C_L = 150pF to 1000pF, see Figure 2			200		ns
$SR_{(TR)}$	Driver slew rate, transition region	R_L = 3kΩ to 7kΩ, V_{CC} = 3.3V	C_L = 150pF to 1000pF	6		30	V/μs
			C_L = 150pF to 2500pF	4		30	

Copyright © GATEMODE Corp.
Tel: (+86) 13135660803
Email: sales@gmmicro.com

6 Parameter Measurement Information

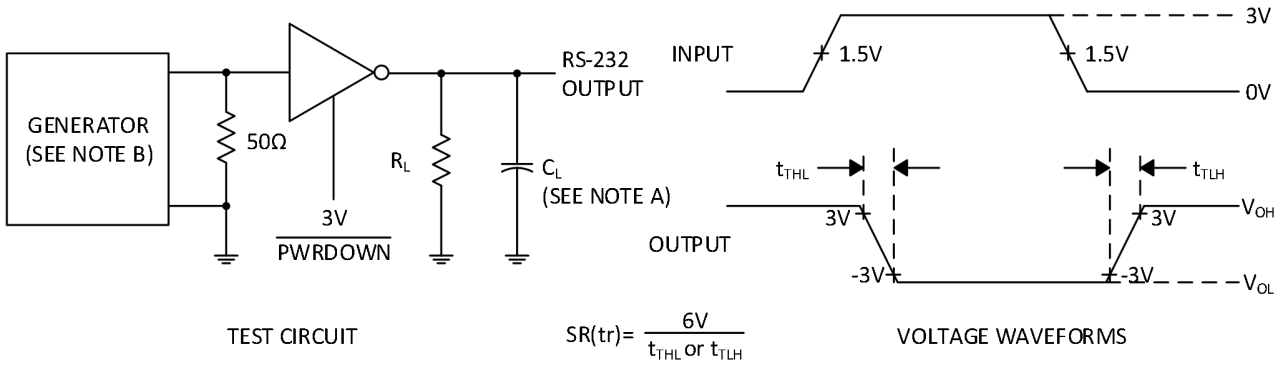

A. C_L includes probe and jig capacitance.
B. The pulse generator has the following characteristics: PRR = 250kbit/s, Z_O = 50Ω, 50% duty cycle, t_r≤ 10ns, t_f≤ 10ns.

Figure 1.Driver Skew Rate

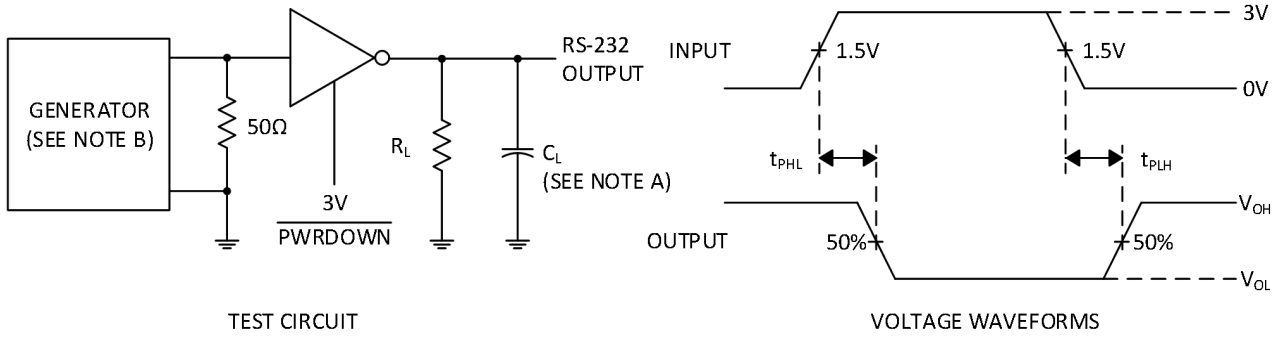

A. C_L includes probe and jig capacitance.
B. The pulse generator has the following characteristics: PRR = 250kbit/s, Z_O = 50Ω, 50% duty cycle, t_r≤ 10ns, t_f≤ 10ns.

Figure 2. Driver Pulse Skew

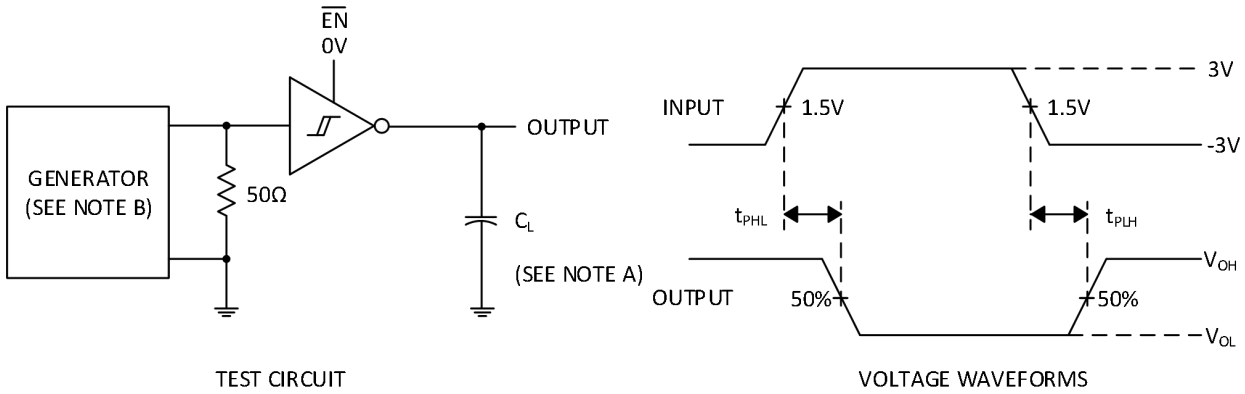

A. C_L includes probe and jig capacitance.
B. The pulse generator has the following characteristics: PRR = 250kbit/s, Z_O = 50Ω, 50% duty cycle, t_r≤ 10ns, t_f≤ 10ns.

Figure 3. Receiver Propagation Delay Times

Copyright © GATEMODE Corp.

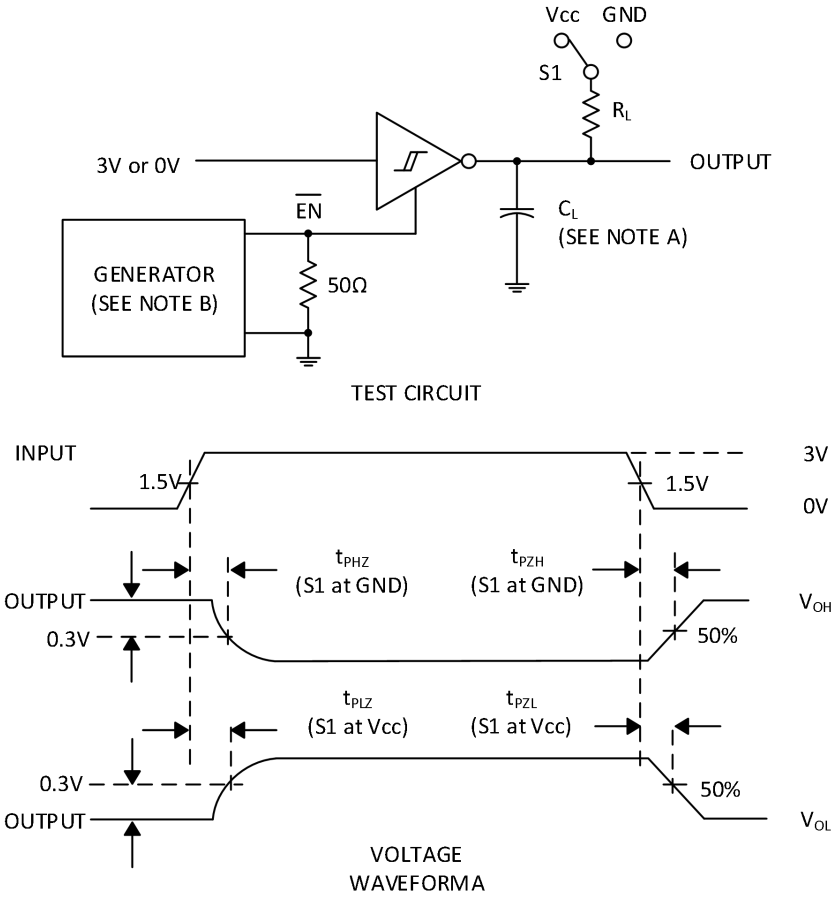

A. C_L includes probe and jig capacitance.
B. The pulse generator has the following characteristics: PRR = 250kbit/s, Z_O = 50Ω, 50% duty cycle, t_r≤ 10ns, t_f≤ 10ns.

Figure 4. Receiver Enable and Disable Times

Copyright © GATEMODE Corp.

7 DETAILED DESCRIPTION

7.1 Functional Block Diagram

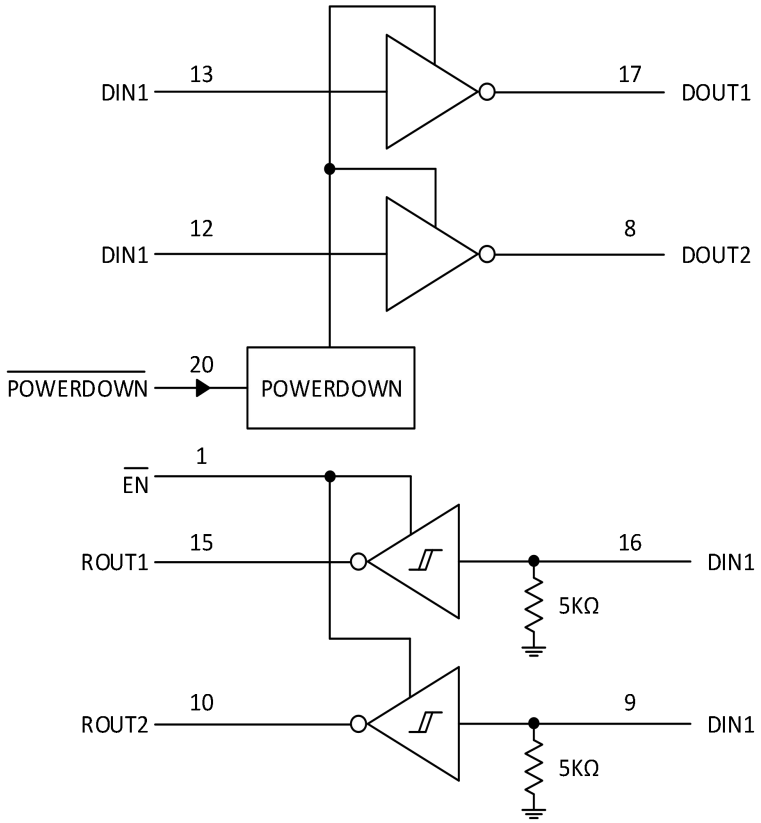

Figure 5. Logic Diagram(Positive Logic)

7.2 Device Functional Modes

Table 1.Each Driver

INPUTS(1)		OUTPUT
DIN	$\overline{\text{PWRDOWN}}$	DOUT
X	L	Z
L	H	H
H	H	L

Table 2.Each Receiver

INPUTS(1)		OUTPUT
RIN	$\overline{\text{EN}}$	ROUT
L	L	H
H	L	L
X	H	Z
OPEN	L	H

1. H=high level,L=low level,X=irrelevant,Z=high impedance(off),OPEN=input disconnected or connected driver off.

Copyright © GATEMODE Corp.

8 APPLICATION AND IMPLEMENTATION

8.1 Typical Application

Figure 6 below shows a typical application of GM3222E. The ROUT and DIN pins are connected to the UART port or the common logic line, and the RIN and DOUT pins are connected to the RS232 connector port or the RS232 bus. In order to work properly, please refer to Table 3 to select the appropriate capacitor.

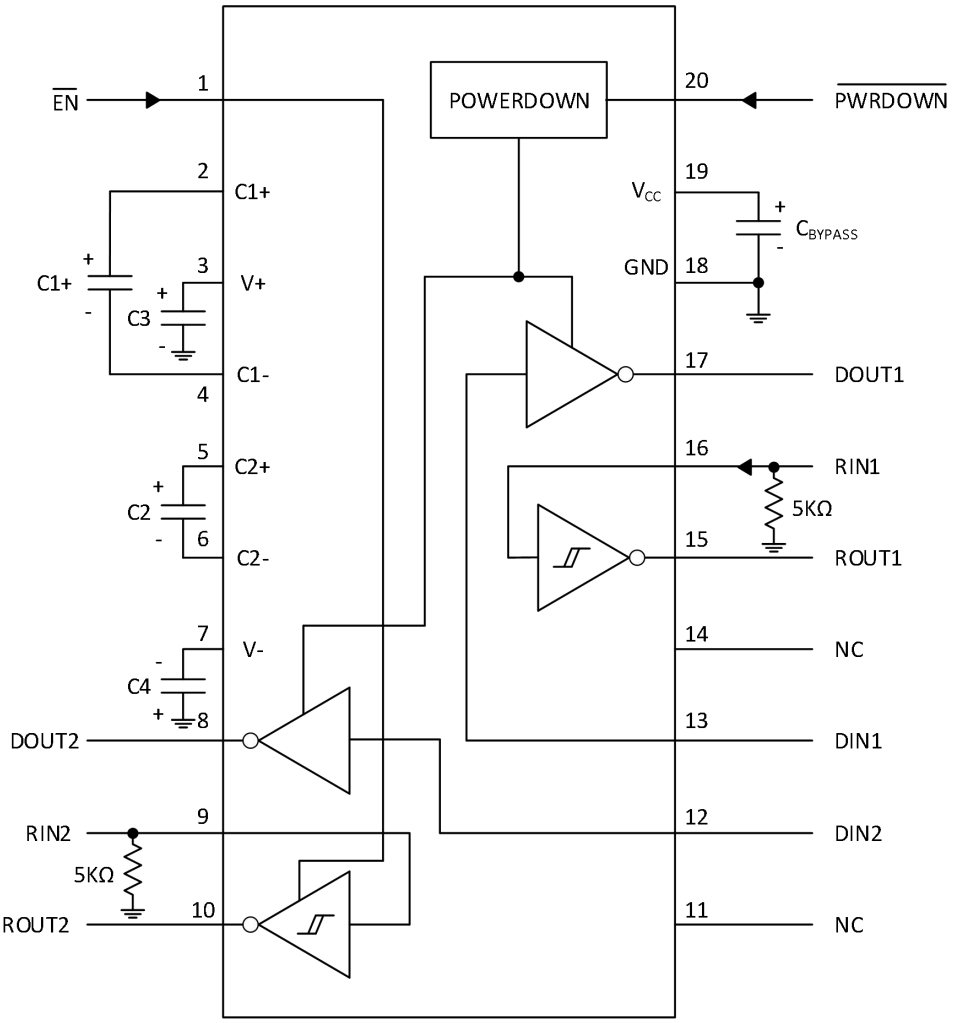

Figure 6.Typical Operating Circuit and Capacitor Values

Notes:C3 can be connected to V_{CC} or GND

Table 3. V_{CC} vs Capacitor Values

V_{CC}	C1	C2,C3,C4
3.3V±0.3V	0.1μF	0.1μF
5V±0.5V	0.047μF	0.33μF
3V to 5.5V	0.1μF	0.47μF

8.2 POWER SUPPLY

The Vcc voltage must be connected to the same power source used for logic device connected to DIN and ROUT pins. Vcc must be between 3V and 5.5V.

Copyright © GATEMODE Corp.

9 LAYOUT

Keep the external capacitor traces short. This is more important on C1 and C2 nodes that have the fastest rise and fall times.

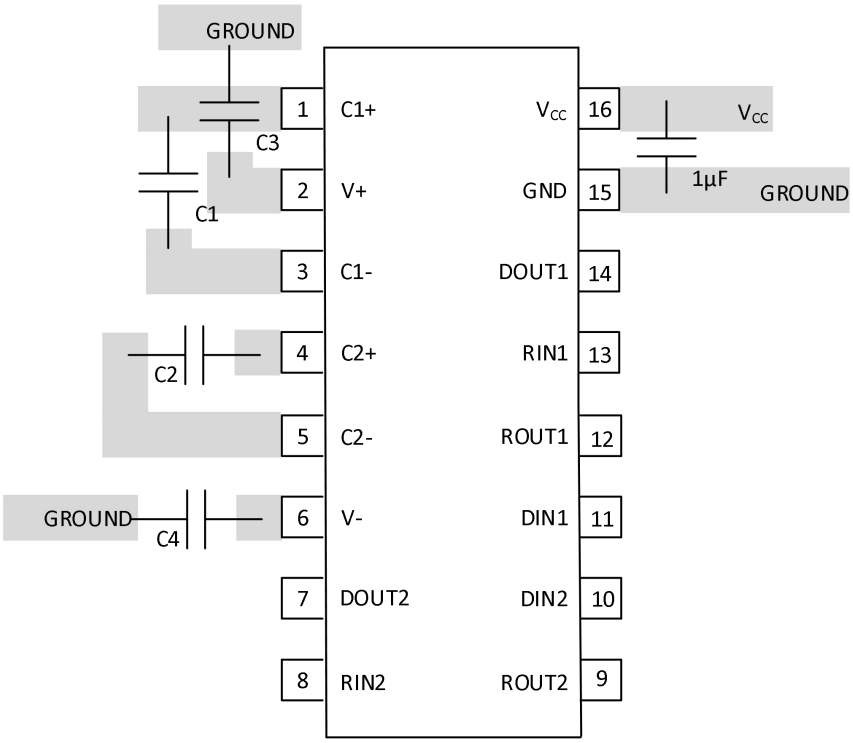

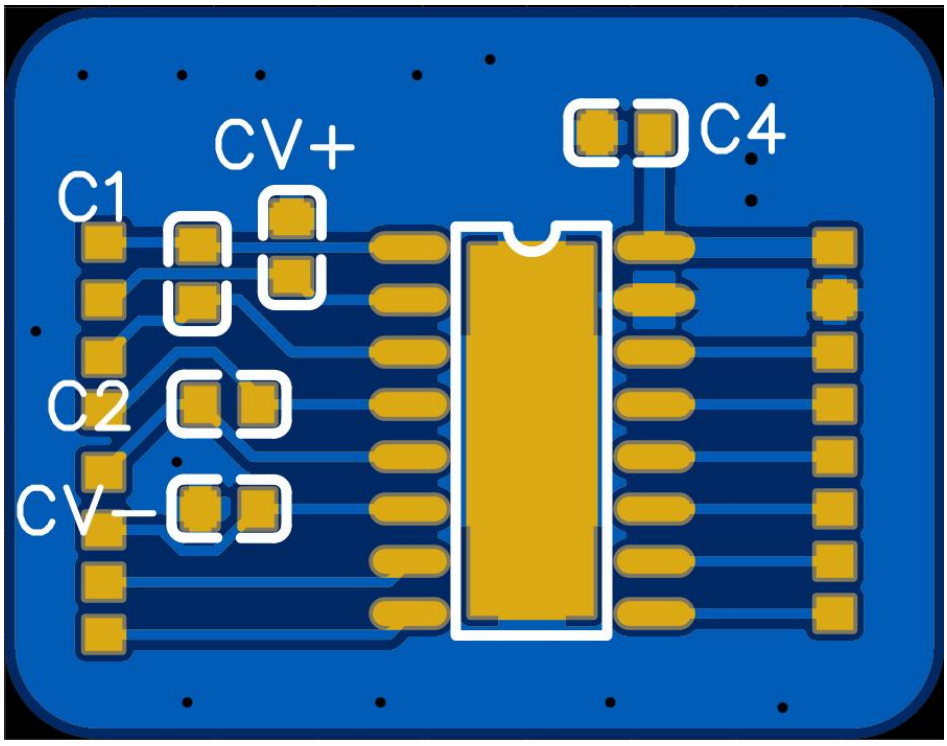

Figure 7. Layout Diagram

Copyright © GATEMODE Corp.

PACKAGE DIMENSION
TSSOP20

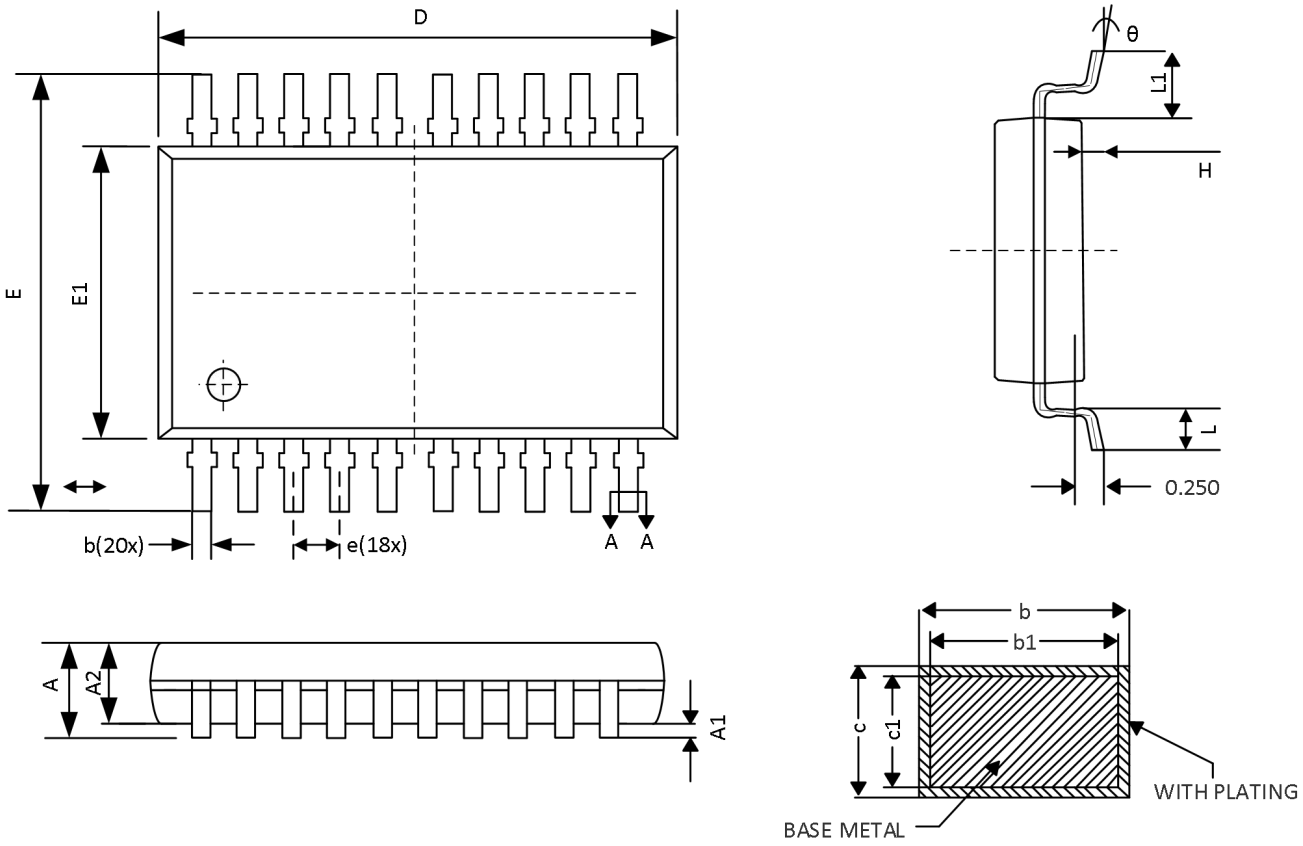

	SYMBOL	MIN	NOM	MAX
TOTAL THICKNESS	A	-	-	1.20
STAND OFF	A1	0.05	0.100	0.15
MOLD TOTAL THICKNESS	A2	0.90	1.00	1.05
LEAD WDTH-1	b	0.20	-	0.28
LEAD WDTH-2	b1	0.19	0.22	0.25
LEAD THICKNESS-1	c	0.13	-	0.17
LEAD THICKNESS-2	C1	0.120	0.127	0.14
MOLD LENGTH	D	6.40	6.50	6.60
LEAD SPAN	E	6.20	6.40	6.60
MOLD WIDITH	E1	4.30	4.40	4.50
LEAD PITCH	e	0.65BSC		
LEAD LENGTH	L1	0.85	1.00	1.15
LEAD SOLE LENGTH	L	0.45	0.60	0.75
LEAD FORM ANGLE	θ	0°	-	8°

Copyright © GATEMODE Corp.

SSOP20

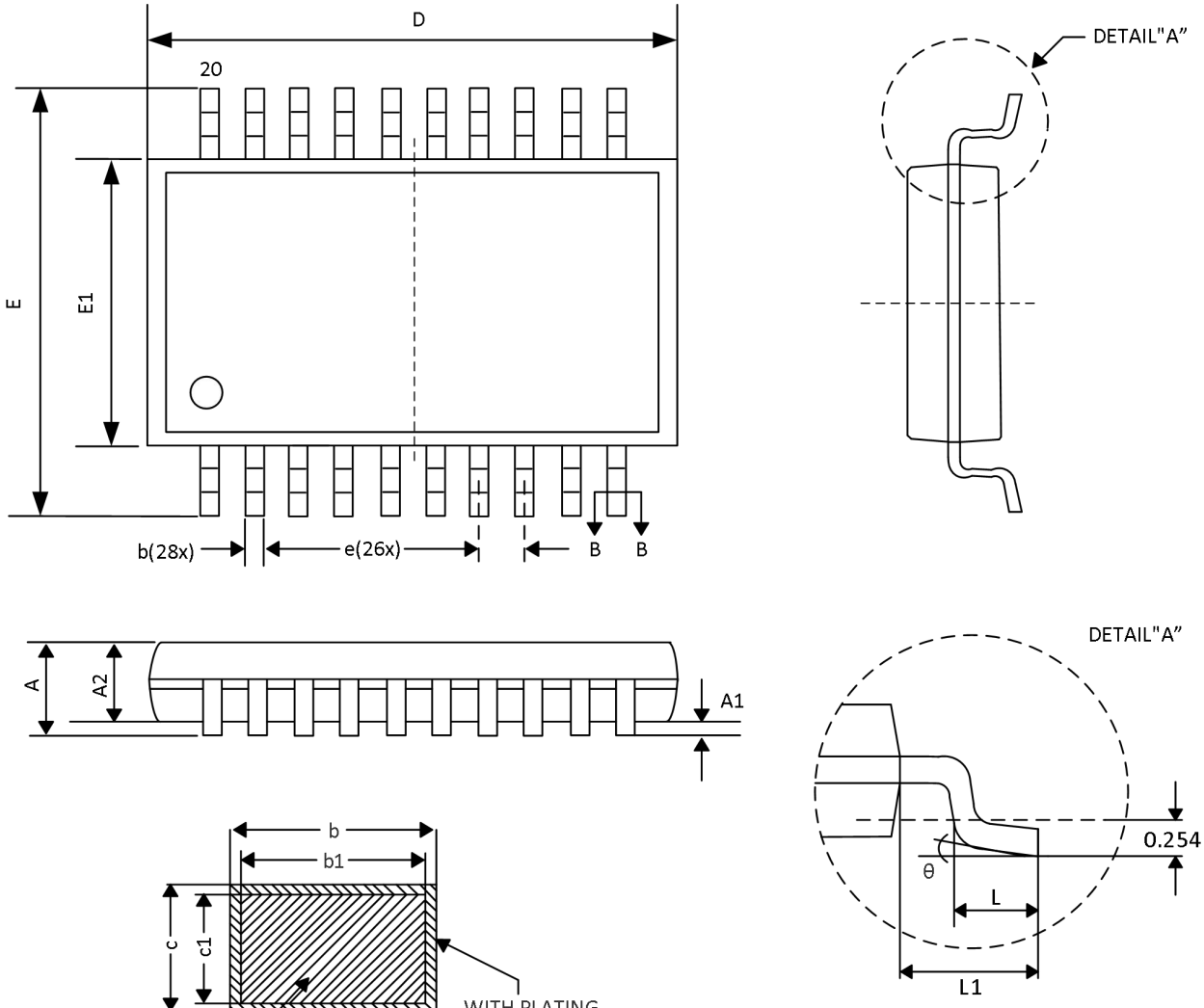

DIM / SYMBOL	MIN	NOM	MAX
A	1.65	-	1.85
A1	0.05	-	0.25
A2	1.45	-	1.55
b	0.28	-	0.36
B1		0.30BSC	
c	0.15	-	0.19
C1		0.152BSC	
D	7.15	-	7.25
E	7.65	-	7.95
E1	5.25	-	5.35
e		0.65BSC	
L	0.60	-	0.80
L1		1.25TYPE	
θ	0°	-	8°

Copyright © GATEMODE Corp.

Order Information

Order number	Package	Marking information	Operation Temperature Range	MSL Grade	Ship, Quantity	Green
GM3222ETA	TSSOP20	GM3222ETA	-40 to 125°C	3	T&R,4000	Rohs
GM3222EBA	SSOP20	GM3222EBA	-40 to 125°C	3	T&R,2500	Rohs

Copyright © GATEMODE Corp.

VERSION MODIFICATION RECORD

VERSION	MODIFY THE DESCRIPTION	PAGE	TIME	MODIFY PERSONNEL
1.1	1.Original:GM3222E_1.0 →GM3222E_1.1		2026-6-15	KANG
	2.Extended the recommended operating temperature range from –40°C to +85°C to –40°C to +125°C.	3		
	3.Revised the description of the operating temperature range in the ordering information to align with the extended range (–40°C to +125°C).	12	2026-6-15	KANG

Copyright © GATEMODE Corp.