深圳市晶科鑫实业有限公司

样品承认书

客户代码：		
物料名称：	贴片钟振	
规格型号：	SMD1612 8.000MHz 1.8V～3.3V ±30PPM总频差 -40~85℃	
P N/ SJK：	8N08000G13YC	
环保属性：	■RoHS ■REACH ■HF □PAHS □其它	
版 次：	A1 2025-7-29 初版	最小包装： 3000pcs/real
湿敏等级：	一级	

承 认 签 章					
供 应 商 承 认			（ ）公 司 承 认		
制定	审 核	核 准	工 程 师	审 核	批 准
贺丹斌	李相同	刘惠光			
SJK 支持			盖章签署		
FAE_EMAIL			日 期		
日 期			批示： □接受 □有条件接受		
备注:					

FEATURE

- Ultra Small SMD seam sealed clock crystal oscillator units.
- For applications in WLAN, Bluetooth,DSC, DSL and other IT product.
- Tri-state function available.
- RoHS Compliant / Pb Free.

ELECTRICAL SPECIFICATIONS

Parmeters	Condition\Model	8N	
Fan Out Type		CMOS	
Supply Voltage		1.8V～3.3V±10%	
Frequency		8.000MHz	
Operating Temperature		-40℃ to +85℃	
Current		5mA max	
Frequency Stability	AT 25℃	±10ppm	
	Over Operating Temperature range	±20ppm	
Output Voltage	Vol(max)	10%VDD	
	VoH(min)	90%VDD	
Rise/Fall Time	AT 0.1VDD~0.9VDD	5ns max	
Load Capacitance		15pF	
Duty Cycle		50±10%	
Storge Temperature		-55~+125℃	
Start-upTime		5ms max	
Aging		±3ppm (first year at 25℃)	
Tri-State	Output Active	0.7VDD Min Pin 1 Tri-state	
	Output in High-Impedance state	0.3VDD Max	
PAD Connection		PIN#1 Tri-State/NC	PIN#3 OUT
		PIN#2 GND	PIN#4 Vdd

DIMENSION（Unit：mm）

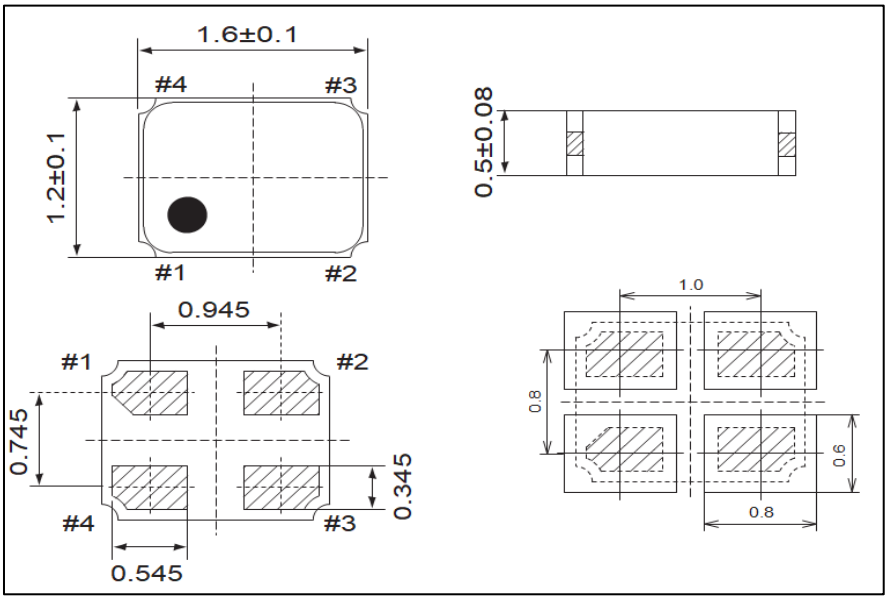

MARK



MEASUREMENT CIRCUIT

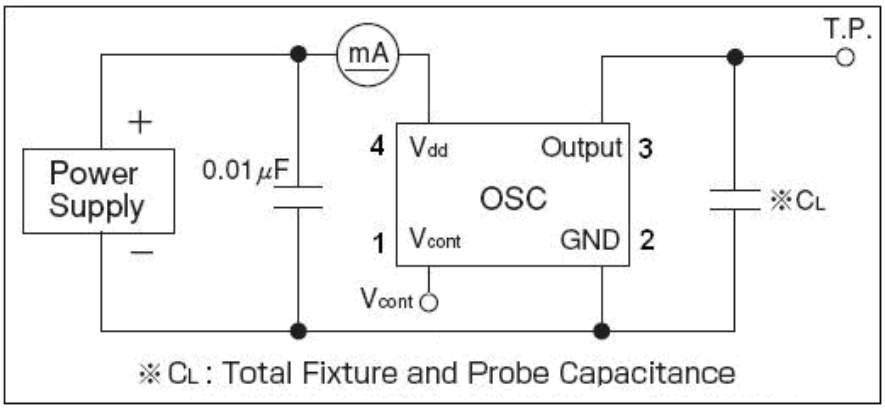

WAVEFORM CONDITIONS

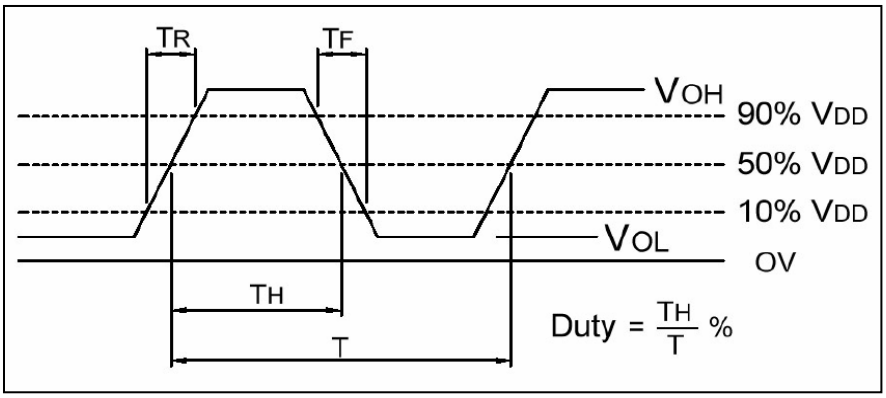

REFLOW CONDITION

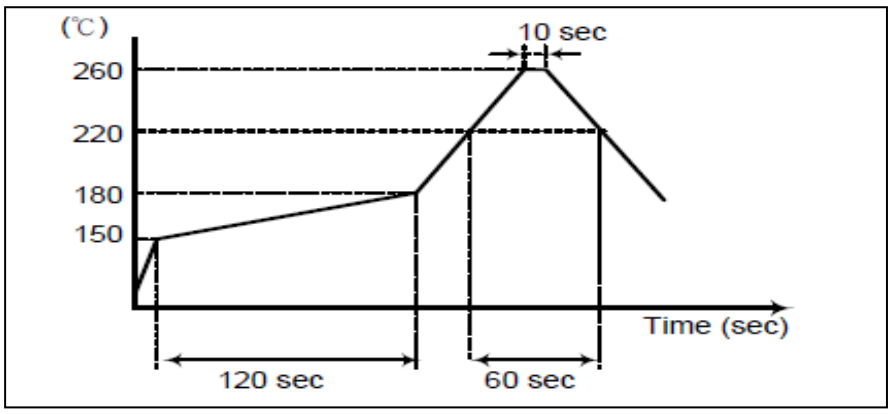

The reflow temperature profile may vary depending on the product model, specifications and frequency range.Refer to the individual product specifications for details

Note

1. General cleaning solutions or ultrasonic cleaning method may be used to clean our products. However,under certain circumstances,ultrasonic cleaning machine could generate resonance at the oscillation frequency of our products and thus deteriorate the electrical characteristics in devices,and even damage the overall structure of devices. Therefore, verification test is recommended before cleaning.
2. Avoid mounting and processing by Ultrasonic welding this method has a possibility of an excessive vibration spreading inside the crystal products and becoming the cause of characteristic deterioration and not oscillating.

CARRIER TYPE

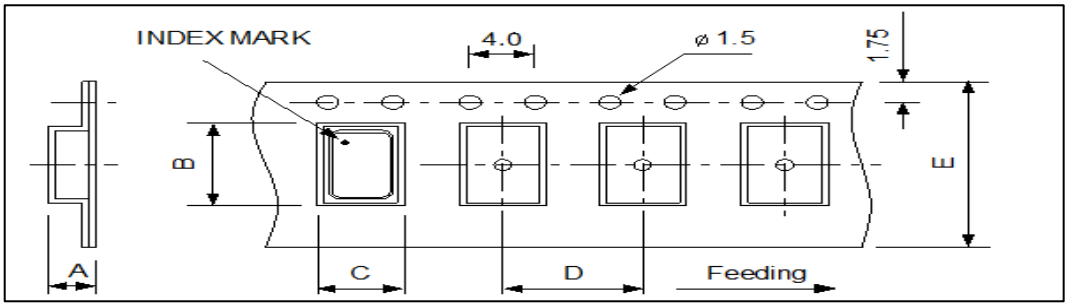

REEL

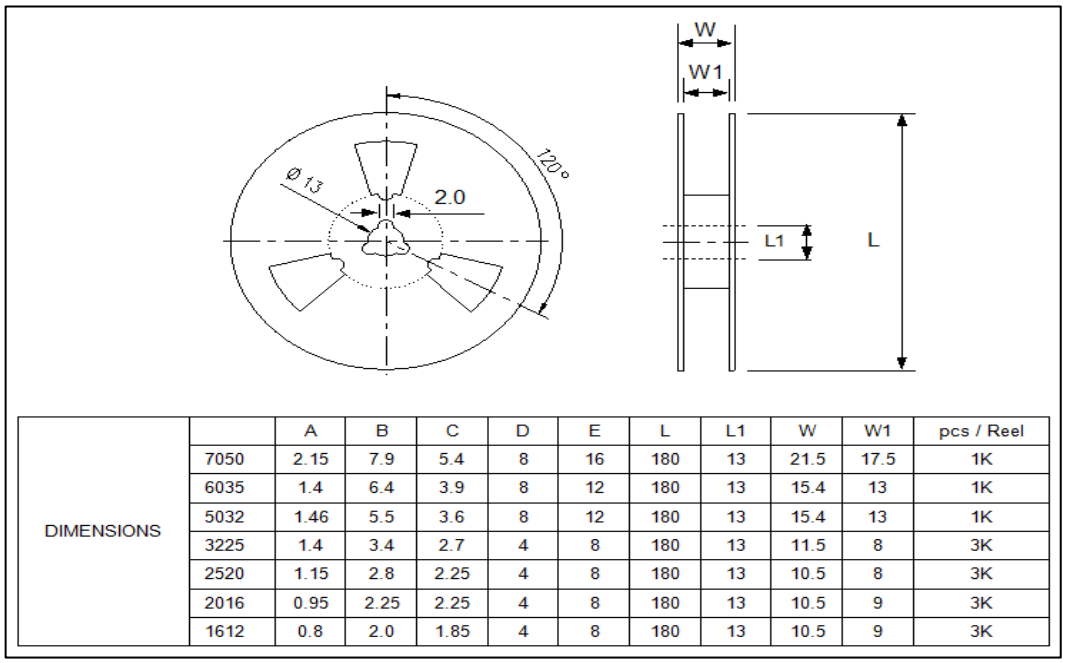

		A	B	C	D	E	L	L1	W	W1	pcs / Reel
DIMENSIONS	7050	2.15	7.9	5.4	8	16	180	13	21.5	17.5	1K
	6035	1.4	6.4	3.9	8	12	180	13	15.4	13	1K
	5032	1.46	5.5	3.6	8	12	180	13	15.4	13	1K
	3225	1.4	3.4	2.7	4	8	180	13	11.5	8	3K
	2520	1.15	2.8	2.25	4	8	180	13	10.5	8	3K
	2016	0.95	2.25	2.25	4	8	180	13	10.5	9	3K
	1612	0.8	2.0	1.85	4	8	180	13	10.5	9	3K

RELIABILITY TEST SPECIFICA TIONS

Test item	Equipment	Condition	Specification
1.SOLDERABILITY TEST	SJK-REL001、RC-328A	TP:260℃ TsMax：200℃ TsMin：150℃ 2 time 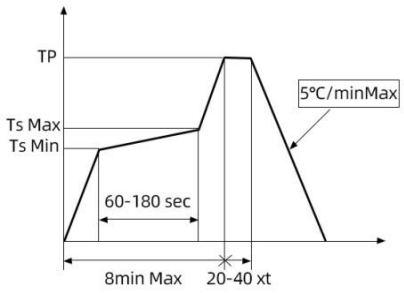	MIL-STD-883E Method 2003.7
2. HERMETICITY TEST	HELIOT-306S	Pressurized 0.4~0.5Mpa ethanol sealed tank for 10 minutes	MIL-STD-883E Method 1014.10
3. VIBRATION TEST	HG-V4、S&A 250B	Enable Crystal(10g) from 10-55-10Hz,X、Y、Z horizontal,1 Minute vibration/time, 1time/ 2 hours.	MIL-STD-883E Method 2007.3
4. MECHANICAL SHOCK	HPC-200、S&A 250B	Enable Crystal 50G(490m/s2) time=11 ms speed=3.4 m/s half sine wave oscillation	JIS C6701
5. DROP TEST	HARD BOARD.S&A250B	75cm High,3 times on hard board	MIL-STD-202F Method 213B
6. HIGH&LOW TEMP STORAGE TEST(Static test)	H-PTH-80CK & HM101-3ABN，S&A 350B/250B	High temperature: 125℃±2℃,1000hr；Low temperature:-40℃±3℃,1000hrs	MIL-STD883C, METHOD 1011.8
7. TEMP &HUM CYCLING TEST	H-PTH-80CK CHAMBE，S&A 350B/250B	Temperature:-10℃±2℃～65℃±2℃,Humidity:93±3%,1 cycle need 24 hrs. 5cycles.	MIL-STD-883E Method 1005.8
8. HIGH TEM. & HUM.STORAGE TEST	H-PTH-80CK CHAMBE，S&A350B/250B	Temperature:85℃±2，Humidity:85+3,-2%,Store 96 hrs	JIS C6701
9. AGING TEST	H-PTH-80CK CHAMBE，S&A350B/250	Temperature:85℃±2，Store 1000 hrs	JIS C5023