SAMXON®

SAMXON BRAND ALUMINUM ELECTROLYTIC CAPACITORS

PRODUCT SPECIFICATION
規格書

CUSTOMER :	**DATE :**
(客戶) :	**(日期) : 2024-04-11**

CATEGORY (品名)	:	ALUMINUM ELECTROLYTIC CAPACITORS
DESCRIPTION (型号)	:	SK 63V330μF(φ10x20)
VERSION (版本)	:	01
Customer P/N	:	
SUPPLIER	:	

SUPPLIER	
PREPARED **（拟定）**	**CHECKED** **（审核）**
梁文文	付婷婷

CUSTOMER	
APPROVAL **（批准）**	**SIGNATURE** **（签名）**

MAN YUE ELECTRONICS COMPANY LIMITED	*ELECTROLYTIC CAPACITOR SPECIFICATION SK SERIES*	**SAMXON**

SPECIFICATION					ALTERNATION HISTORY RECORDS		
SK SERIES							
Rev.	Date	Mark	Page	Contents	Purpose	Drafter	Approver

Table 1 Product Dimensions and Characteristics

Unit: mm

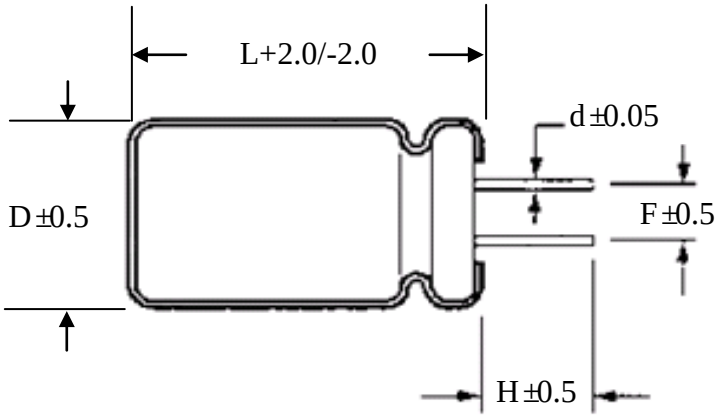

Shape Code	D	10
	L	20
CB Type	F	5.0
	H	3.5
	d	0.6

Table 1

No.	SAMXON Part No.	WV (Vdc)	Cap. (μF)	Cap. tolerance	Temp. range (℃)	tan δ (120Hz, 20℃)	Leakage Current (μA,2min)	Max Ripple Current at 105℃ 100kHz (mA rms)	Impedance at 25℃ 100kHz (Ωmax)	Load lifetime (Hrs)	Dimension (mm)			Sleeve
											D×L	F	φd	
1	ESK337M1JG20CBSNP-R	63	330	-20%~+20%	-40~105	0.09	208	1570	0.056	10000	10X20	5.0	0.6	PET

C O N T E N T S

	Sheet
1. Application	4
2. Part Number System	4
3. Construction	5
4. Characteristics	6~13
4.1 Rated voltage & Surge voltage	
4.2 Capacitance (Tolerance)	
4.3 Leakage current	
4.4 tan δ	
4.5 Impedance	
4.6 Terminal strength	
4.7 Temperature characteristic	
4.8 Load life test	
4.9 Shelf life test	
4.10 Surge test	
4.11 Vibration	
4.12 Solderability test	
4.13 Resistance to solder heat	
4.14 Change of temperature	
4.15 Damp heat test	
4.16 Vent test	
4.17 Maximum permissible (ripple current)	
5.List of "Environment-related Substances to be Controlled ('Controlled Substances')"	14
Attachment: Application Guidelines	15~20

1. Application

This specification applies to polar Aluminum electrolytic capacitor (foil type) used in electronic equipment. Designed capacitor's quality meets IEC60384.

2. Part Number System

1	2	3	4	5	6	7	8	9	10	11	12	13	14	15	16	17
E	G	S	1	0	5	M	1	H	D	1	1	T	C	S	A	P
SERIES			CAPACITANCE			TOLERANCE	VOLTAGE		CASE SIZE			TYPE		SAMXON PRODUCT LINE		SLEEVE MATERIAL

Series
EKF
EKS
EGS
EKM
EKG
EOM
EGF
ESF
EGT
EGK
ESK
ESH
ESK
ERS
EGY
ERF
ERR
ERT
ERE
ERD
ERH
EBD
ERA
ERB
ERC
EFA
ENP
ENH
ERW
ERY
ELP
EAP
EQP
EDP
ETP
EHP
EUP
EKP
EPK
EEP
EFP
ESP
EVP
EGP
EWR
EWI
EWT
EWX
EWF
EWH
EWL
EWB
VS1
VT1
VTD
VTG
VZ2
VTL

Cap (uF)	Code
0.1	104
0.22	224
0.33	334
0.47	474
1	105
2.2	225
3.3	335
4.7	475
10	106
22	226
33	336
47	476
100	107
220	227
330	337
470	477
2200	228
22000	229
33000	339
47000	479
100000	10T
150000	15T
220000	22T
330000	33T
1000000	10M
1500000	15M
2200000	22M
3300000	33M

Tol. (%)	Code
±5	J
±10	K
±15	L
±20	M
±30	N
-40 0	W
-20 0	A
-20 +10	C
-20 +40	X
-20 +50	S
-10 0	B
-10 +20	V
-10 +30	Q
-10 +50	T
+13 +50	E
-5 +15	F
-5 +20	G
0 +20	R
0 +30	O
0 +50	I
+5 +15	Z
+5 +20	D
+10 +50	H

Vol. (W.V.)	Code
2	0D
2.5	0E
4	0G
6.3	0J
8	0K
10	1A
12.5	1B
16	1C
20	1D
25	1E
30	1I
32	1J
35	1V
40	1G
42	1M
50	1H
57	1L
63	1J
71	1S
75	1T
80	1K
85	1R
90	19
100	2A
120	2O
125	2B
150	2Z
160	2C
180	2P
200	2D
215	22
220	2N
230	23
250	2E
275	2T
300	2I
310	2R
315	2F
330	2U
350	2V
360	2X
375	2Q
385	2Y
400	2G
420	2M
450	2W
500	2H
550	25
600	26
630	2J

Case Size	
Diameter(Φ)	Code
3	B
3.5	1
4	C
5	D
6.3	E
8	F
10	G
12.5	I
13	J
13.5	V
14	4
14.5	A
16	K
16.5	7
18	L
18.5	8
20	M
22	N
25	O
30	P
34	W
35	Q
40	R
42	4
45	6
51	S
63.5	T
76	U
80	8
90	X
100	Z
Len. (mm)	Code
4.5	45
5	05
5.4	54
7	07
7.7	77
10.2	T2
11	11
11.5	1A
12	12
12.5	1B
13	13
13.5	1C
20	20
25	25
29.5	2J
30	30
31.5	3A
35	35
35.5	3E
50	50
80	80
100	1L
105	1K
110	1M
120	1N
130	1P
140	1Q
150	1R
155	1E
160	1S
165	1F
170	1T
180	1U
190	1V
200	2L
215	2A
210	2M
220	2N
240	2Q
250	2R
260	2S
270	2T

Feature	Code
Radial bulk	RR
Ammo Taping	
2.0mm Pitch	TT
2.5mm Pitch	TU
3.5mm Pitch	TV
5.0mm Pitch	TC
Lead Cut & Form	
CB-Type	CB
CE-Type	CE
HE-Type	HE
KD-Type	KD
FD-Type	FD
EH-Type	EH
PCB Terminal	
Snap-in	SW
	SX
	SZ
Lug	SG
Screw	O5
	O6
	T5
	T6
	D5
	D6

SAMXON Product Line
For internal use only (The product lines we have H,A,B,C,D,E,M or 0,1,2,3,4,5,9).

Sleeve Material	Code
PET	P
PVC	If the sleeve material is PVC, there will be blank in seventeenth digit.

3.Construction

Single ended type to be produced to fix the terminals to anode and cathode foil, and wind together with paper, and then wound element to be impregnated with electrolyte will be enclosed in an aluminum case. Finally sealed up tightly with end seal rubber, then finished by putting on the vinyl sleeve.

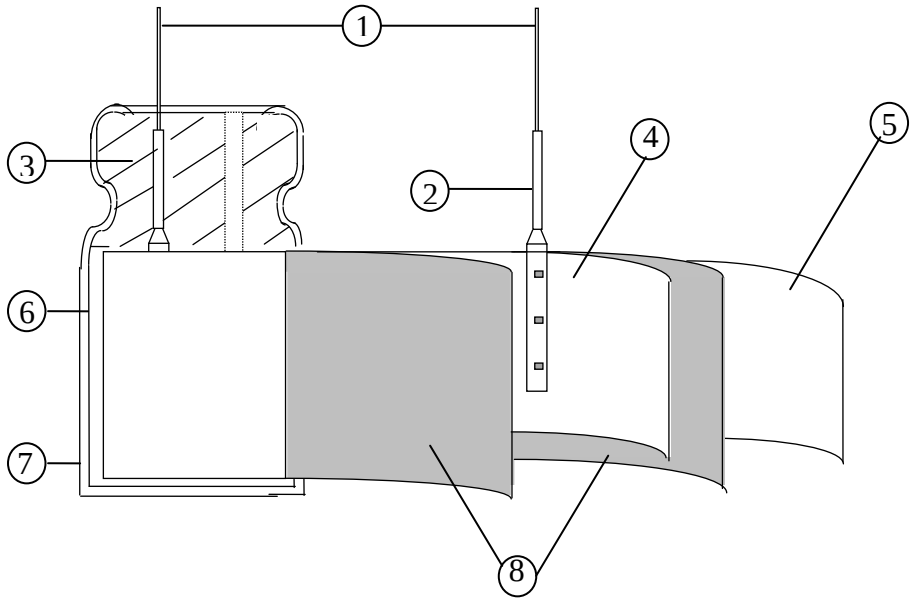

No	Component	Material
1	Lead Line	Tinned CP wire (Pb Free)
2	Terminal	Aluminum wire
3	Rubber seal	Rubber
4	Al-Foil (+)	Formed aluminum foil
5	Al-Foil (-)	Etched aluminum foil or formed aluminum foil
6	Case	Aluminum case
7	Sleeve	PET
8	Separator	Electrolyte paper

4. Characteristics

Standard atmospheric conditions

Unless otherwise specified, the standard range of atmospheric conditions for making measurements and tests is as follows:

Ambient temperature	:15°C to 35°C
Relative humidity	: 45% to 85%
Air Pressure	: 86kPa to 106kPa

If there is any doubt about the results, measurement shall be made within the following conditions:

Ambient temperature	: 20°C ± 2°C
Relative humidity	: 60% to 70%
Air Pressure	: 86kPa to 106kPa

Operating temperature range

The ambient temperature range at which the capacitor can be operated continuously at rated voltage
See table 1 temperature range.

As to the detailed information, please refer to table 2

Table2

ITEM		PERFORMANCE
4.1	Rated voltage (WV) Surge voltage (SV)	<table><tr><td>WV (V.DC)</td><td>6.3</td><td>10</td><td>16</td><td>25</td><td>35</td><td>50</td><td>63</td></tr><tr><td>SV (V.DC)</td><td>8</td><td>13</td><td>20</td><td>32</td><td>44</td><td>63</td><td>79</td></tr></table>
4.2	Nominal capacitance (Tolerance)	**<Condition>** Measuring Frequency :120Hz±12Hz Measuring Voltage : Not more than 0.5Vrms Measuring Temperature : 20±2℃ **<Criteria>** Shall be within the specified capacitance tolerance.
4.3	Leakage current	**<Condition>** Connecting the capacitor with a protective resistor (1KΩ±10Ω) in series for 2 minutes, and then, measure Leakage Current. **<Criteria>** please refer to table 1
4.4	tan δ	**<Condition>** See 4.2, Norm Capacitance, for measuring frequency, voltage and temperature. **<Criteria>** please refer to table 1
4.5	Impedance	**<Condition>** Measuring frequency:100kHz; Measuring temperature:20±2℃ Measuring point: 2mm max. from the surface of a sealing rubber on the lead wire. **<Criteria>** please refer to table 1

4.6 Terminal strength

<Condition>

Tensile Strength of Terminals

Fixed the capacitor, applied force to the terminal in lead out direction for 10 ±1 seconds.

Bending Strength of Terminals

Fixed the capacitor, applied force to bent the terminal (1~4 mm from the rubber) for 90° within 2~3 seconds, and then bent it for 90° to its original position within 2~3 seconds.

Diameter of lead wire	Tensile force N (kgf)	Bending force N (kgf)
0.5mm and less	5 (0.51)	2.5 (0.25)
Over 0.5mm to 0.8mm	10 (1.0)	5 (0.51)

<Criteria>

No noticeable changes shall be found, no breakage or looseness at the terminal.

4.7 Temperature characteristics

<Condition>

STEP	Testing Temperature(℃)	Time
1	20±2	Time to reach thermal equilibrium
2	-25(-40) ±3	Time to reach thermal equilibrium
3	20±2	Time to reach thermal equilibrium
4	105±2	Time to reach thermal equilibrium
5	20±2	Time to reach thermal equilibrium

<Criteria>

a. In step 4, tan δ shall be within the limit of Item 4.4
   The leakage current measured shall not more than 8 times of its specified value.

b. In step 5, tan δ shall be within the limit of Item 4.4
   The leakage current shall not more than the specified value

<table>
<tr>
<td>4.7</td>
<td></td>
<td>c. In step 2,At-40/-25℃, impedance (Z) ratio shall not exceed the value of the following table.
<table>
<tr><td>Working Voltage (V)</td><td>6.3</td><td>10</td><td>16</td><td>25</td><td>35</td><td>50</td><td>63</td></tr>
<tr><td>Z-25℃/Z+20℃</td><td>2</td><td>2</td><td>2</td><td>2</td><td>2</td><td>2</td><td>2</td></tr>
</table>
Capacitance, tan δ , and impedance shall be measured at 120Hz.</td>
</tr>
<tr>
<td>4.8</td>
<td>Load life test</td>
<td><Condition>
According to IEC60384-4No.4.13 methods, The capacitor is stored at a at a temperature of 105℃ ±2 with DC bias voltage plus the rated ripple current for Table 1 load life time hours. (The sum of DC and ripple peak voltage shall not exceed the rated working voltage) Then the product should be tested after 16 hours recovering time at atmospheric conditions.
The result should meet the following table:

<Criteria>
The characteristic shall meet the following requirements.
<table>
<tr><td>Leakage current</td><td>Value in 4.3 shall be satisfied</td></tr>
<tr><td>Capacitance Change</td><td>Within ±25% of initial value(6.3,10V:≤±30%)</td></tr>
<tr><td>tan δ</td><td>Not more than 200% of the specified value.</td></tr>
<tr><td>Appearance</td><td>There shall be no leakage of electrolyte.</td></tr>
</table>
</td>
</tr>
<tr>
<td>4.9</td>
<td>Shelf life test</td>
<td><Condition>
The capacitors are then stored with no voltage applied at a temperature of 105±2℃ for 1000+48/0 hours.
Following this period the capacitors shall be removed from the test chamber and be allowed to stabilized at room temperature for 4~8 hours.
Next they shall be connected to a series limiting resistor(1k±100Ω) with D.C. rated voltage applied for 30min. After which the capacitors shall be discharged, and then, tested the characteristics.
<Criteria>
The characteristic shall meet the following requirements.
<table>
<tr><td>Leakage current</td><td>Value in 4.3 shall be satisfied</td></tr>
<tr><td>Capacitance Change</td><td>Within±25% of initial value(6.3,10V:≤±30%)</td></tr>
<tr><td>tan δ</td><td>Not more than 200% of the specified value.</td></tr>
<tr><td>Appearance</td><td>There shall be no leakage of electrolyte.</td></tr>
</table>
Remark: If the capacitors are stored more than 1 year, the leakage current may increase. Please apply voltage through about 1 kΩ resistor, if necessary.</td>
</tr>
</table>

4.10	Surge test	**<Condition>** Applied a surge voltage to the capacitor connected with a (100 ±50)/C_R (kΩ) resistor. The capacitor shall be submitted to 1000 cycles, each consisting of charge of 30 ±5s, followed discharge of 5 min 30s. The test temperature shall be 15~35℃. C_R :Nominal Capacitance (μ F) **<Criteria>** Leakage current: Not more than the specified value. Capacitance Change: Within ±15% of initial value. tan δ: Not more than the specified value. Appearance: There shall be no leakage of electrolyte. Attention: This test simulates over voltage at abnormal situation only. It is not applicable to such over voltage as often applied.
4.11	Vibration test	**<Condition>** The following conditions shall be applied for 2 hours in each 3 mutually perpendicular directions. Vibration frequency range : 10Hz ~ 55Hz Peak to peak amplitude : 1.5mm Sweep rate : 10Hz ~ 55Hz ~ 10Hz in about 1 minute Mounting method: The capacitor with diameter greater than 12.5mm or longer than 25mm must be fixed in place with a bracket. 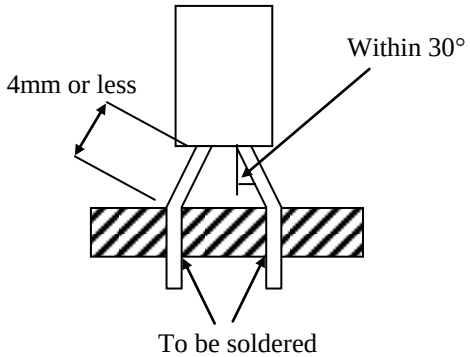

		<Criteria> After the test, the following items shall be tested: Inner construction: No intermittent contacts, open or short circuiting. No damage of tab terminals or electrodes. Appearance: No mechanical damage in terminal. No leakage of electrolyte or swelling of the case. The markings shall be legible.
4.12	Solderability test	**<Condition>** The capacitor shall be tested under the following conditions: Sn-Cu solder Soldering temperature : 250±3°C Dipping depth : 2mm Dipping speed : 25±2.5mm/s Dipping time : 3±0.5s **<Criteria>** Coating quality: A minimum of 95% of the surface being immersed
4.13	Resistance to solder heat test	**<Condition>** Terminals of the capacitor shall be immersed into solder bath at 260±5℃for10±1seconds or 400±10℃for3$^{+1}_{-0}$seconds to 1.5~2.0mm from the body of capacitor . Then the capacitor shall be left under the normal temperature and normal humidity for 1~2 hours before measurement. **<Criteria>** Leakage current: Not more than the specified value. Capacitance Change: Within ±10% of initial value. tan δ: Not more than the specified value. Appearance: There shall be no leakage of electrolyte.

<table>
<tr>
<td>4.14</td>
<td>Change of temperature test</td>
<td>
<Condition>
Temperature Cycle:
According to IEC60384-4No.4.7 methods, capacitor shall be placed in an oven, the condition according as below:
<table>
<tr><th>Temperature</th><th>Time</th></tr>
<tr><td>(1)+20℃</td><td>≤3 Minutes</td></tr>
<tr><td>(2) -25℃/-40℃</td><td>30±2 Minutes</td></tr>
<tr><td>(3)+105℃</td><td>30±2 Minutes</td></tr>
<tr><td colspan="2">(1) to (3)=1 cycle, total 5 cycle</td></tr>
</table>
<Criteria>
The characteristic shall meet the following requirement
<table>
<tr><td>Leakage current</td><td>Not more than the specified value.</td></tr>
<tr><td>tan δ</td><td>Not more than the specified value.</td></tr>
<tr><td>Appearance</td><td>There shall be no leakage of electrolyte.</td></tr>
</table>
</td>
</tr>
<tr>
<td>4.15</td>
<td>Damp heat test</td>
<td>
<Condition>
Humidity Test:
According to IEC60384-4No.4.12methods, capacitor shall be exposed for 500±8 hours in an atmosphere of 90~95%R H .at 40±2℃, the characteristic change shall meet the following requirement.

<Criteria>
<table>
<tr><td>Leakage current</td><td>Not more than the specified value.</td></tr>
<tr><td>Capacitance Change</td><td>Within ±20% of initial value.</td></tr>
<tr><td>tan δ</td><td>Not more than120%of the specified value.</td></tr>
<tr><td>Appearance</td><td>There shall be no leakage of electrolyte.</td></tr>
</table>
</td>
</tr>
</table>

4.16	Vent test	**<Condition>** The following test only apply to those products with vent products at diameter ≥∅6.3 with vent. D.C. test The capacitor is connected with its polarity reversed to a DC power source. Then a current selected from Table 2 is applied. <Table 2> Diameter (mm) / DC Current (A) 22.4 or less / 1 **<Criteria>** The vent shall operate with no dangerous conditions such as flames or dispersion of pieces of the capacitor and/or case.
4.17	Maximum permissible (ripple current)	**<Condition>** The maximum permissible ripple current is the maximum A.C current at 100kHz and can be applied at maximum operating temperature Table-3 The combined value of D.C voltage and the peak A.C voltage shall not exceed the rated voltage and shall not reverse voltage. Frequency Multipliers: Coefficient / Freq. (Hz) / Cap. (μ F) — 120 / 1k / 10k / 100k 33~270 — 0.50 / 0.73 / 0.92 / 1.00 330~680 — 0.55 / 0.77 / 0.94 / 1.00 820~1800 — 0.60 / 0.80 / 0.96 / 1.00 2200~8200 — 0.70 / 0.85 / 0.98 / 1.00 Temperature Coefficient: Capacitor ambient temperature — ≤ 65℃ / 75℃ / 85℃ / 95℃ / 105℃ Temperature coefficient Actural rms ripple Rated rms max.ripple — 1.73 / 1.73 / 1.73 / 1.41 / 1.00

5. It refers to the latest document of "Environment-related Substances standard"(WI-HSPM-QA-072).

Substances	
Heavy metals	Cadmium and cadmium compounds
	Lead and lead compounds
	Mercury and mercury compounds
	Hexavalent chromium compounds
Chloinated organic compounds	Polychlorinated biphenyls (PCB) Polychlorinated naphthalenes (PCN) Polychlorinated terphenyls (PCT)
	Short-chain chlorinated paraffins(SCCP)
	Other chlorinated organic compounds
Brominated organic compounds	Polybrominated biphenyls (PBB)
	Polybrominated diphenylethers(PBDE) (including decabromodiphenyl ether[DecaBDE])
	Other brominated organic compounds
Tributyltin compounds(TBT) Triphenyltin compounds(TPT)	
Asbestos	
Specific azo compounds	
Formaldehyde	
Polyvinyl chloride (PVC) and PVC blevds	
Beryllium oxide	
Beryllium copper	
Specific phthalates (DEHP,DBP,BBP,DINP,DIDP,DNOP,DNHP)	
Hydrofluorocarbon (HFC), Perfluorocarbon (PFC)	
Perfluorooctane sulfonates (PFOS)	
Specific Benzotriazole	

Attachment: Application Guidelines

1.Circuit Design

1.1 Operating Temperature and Frequency

Electrolytic capacitor electrical parameters are normally specified at 20℃ temperature and 120Hz frequency. These parameters vary with changes in temperature and frequency. Circuit designers should take these changes into consideration.

(1) Effects of operating temperature on electrical parameters

a) At higher temperatures, leakage current and capacitance increase while equivalent series resistance (ESR) decreases.

b) At lower temperatures, leakage current and capacitance decrease while equivalent series resistance (ESR) increases.

(2) Effects of frequency on electrical parameters

a) At higher frequencies capacitance and impedance decrease while tan δ increases.

b) At lower frequencies, ripple current generated heat will rise due to an increase in equivalent series resistance (ESR).

1.2 Operating Temperature and Life Expectancy

See the file: Life calculation of aluminum electrolytic capacitor

1.3 Common Application Conditions to Avoid

The following misapplication load conditions will cause rapid deterioration to capacitor electrical parameters. In addition, rapid heating and gas generation within the capacitor can occur causing the pressure relief vent to operate and resultant leakage of electrolyte. Under Leaking electrolyte is combustible and electrically conductive.

(1) Reverse Voltage

DC capacitors have polarity. Verify correct polarity before insertion. For circuits with changing or uncertain polarity, use DC bipolar capacitors. DC bipolar capacitors are not suitable for use in AC circuits.

(2) Charge / Discharge Applications

Standard capacitors are not suitable for use in repeating charge / discharge applications. For charge / discharge applications consult us and advise actual conditions.

(3) Over voltage

Do not apply voltages exceeding the maximum specified rated voltage. Voltages up to the surge voltage rating are acceptable for short periods of time. Ensure that the sum of the DC voltage and the superimposed AC ripple voltage does not exceed the rated voltage.

(4) Ripple Current

Do not apply ripple currents exceeding the maximum specified value. For high ripple current applications, use a capacitor designed for high ripple currents or contact us with your requirements.
Ensure that allowable ripple currents superimposed on low DC bias voltages do not cause reverse voltage conditions.

(5) Pulse Current

The pulse current cannot exceed 10 times the rated ripple current at 120Hz.

1.4 Using Two or More Capacitors in Series or Parallel

(1) Capacitors Connected in Parallel

The circuit resistance can closely approximate the series resistance of the capacitor causing an imbalance of ripple current loads within the capacitors. Careful design of wiring methods can minimize the possibility of excessive ripple currents applied to a capacitor.

(2) Capacitors Connected in Series

Normal DC leakage current differences among capacitors can cause voltage imbalances. The use of voltage divider shunt resistors with consideration to leakage current can prevent capacitor voltage imbalances.

1.5 Capacitor Mounting Considerations

(1) Double Sided Circuit Boards

Avoid wiring pattern runs, which pass between the mounted capacitor and the circuit board.
When dipping into a solder bath, excess solder may collect under the capacitor by capillary action and short circuit the anode and cathode terminals.

(2)Circuit Board Hole Positioning

The vinyl sleeve of the capacitor can be damaged if solder passes through a lead hole for subsequently processed parts. Special care when locating hole positions in proximity to capacitors is recommended.

(3)Circuit Board Hole Spacing

The circuit board holes spacing should match the capacitor lead wire spacing within the specified tolerances. Incorrect spacing can cause excessive lead wire stress during the insertion process. This may result in premature capacitor failure due to short or open circuit, increased leakage current, or electrolyte leakage.

(4) Clearance for Case Mounted Pressure Relief vents

Capacitors with case mounted pressure relief vents require sufficient clearance to allow for proper vent operation. The minimum clearances are dependent on capacitor diameters as proper vent operation. The minimum clearances are dependent on capacitor diameters as follows.

φ6.3~φ16mm:2mm minimum, φ18~φ35mm:3mm minimum, φ40mm or greater:5mm minimum.

(5) Clearance for Seal Mounted Pressure Relief Vents

A hole in the circuit board directly under the seal vent location is required to allow proper release of pressure.

(6) Wiring Near the Pressure Relief Vent

Avoid locating high voltage or high current wiring or circuit board paths above the pressure relief vent. Flammable, high temperature gas exceeding 100℃ may be released which could dissolve the wire insulation and ignite.

(7) Circuit Board patterns Under the Capacitor

Avoid circuit board runs under the capacitor as electrolyte leakage could cause an electrical short.

(8) Screw Terminal Capacitor Mounting

Do not orient the capacitor with the screw terminal side of the capacitor facing downwards.
Tighten the terminal and mounting bracket screws within the torque range specified in the specification.

1.6 Electrical Isolation of the Capacitor

Completely isolate the capacitor as follows.

(1) Between the cathode and the case (except for axially leaded B types) and between the anode terminal and other circuit paths

(3) Between the extra mounting terminals (on T types) and the anode terminal, cathode terminal, and other circuit paths.

1.7 The Product endurance should take the sample as the standard.

1.8 If conduct the load or shelf life test, must be collect date code within 6 months products of sampling.

1.9 Capacitor Sleeve

The vinyl sleeve or laminate coating is intended for marking and identification purposes and is not meant to electrically insulate the capacitor.
The sleeve may split or crack if immersed into solvents such as toluene or xylene, and then exposed to high temperatures.

CAUTION!

Always consider safety when designing equipment and circuits. Plan for worst case failure modes such as short circuits and open circuits which could occur during use.

(1) Provide protection circuits and protection devices to allow safe failure modes.

(2) Design redundant or secondary circuits where possible to assure continued operation in case of main circuit failure.

2.Capacitor Handling Techniques

2.1 Considerations Before Using

(1) Capacitors have a finite life. Do not reuse or recycle capacitors from used equipment.

(2) Transient recovery voltage may be generated in the capacitor due to dielectric absorption. If required, this voltage can be discharged with a resistor with a value of about 1kΩ.

(3) Capacitors stored for long periods of time may exhibit an increase in leakage current. This can be corrected by gradually applying rated voltage in series with a resistor of approximately 1kΩ.

(4) If capacitors are dropped, they can be damaged mechanically or electrically. Avoid using dropped capacitors.

(5) Dented or crushed capacitors should not be used. The seal integrity can be compromised and loss of electrolyte / shortened life can result.

2.2 Capacitor Insertion

* (1) Verify the correct capacitance and rated voltage of the capacitor.
* (2) Verify the correct polarity of the capacitor before inserting.
* (3) Verify the correct hole spacing before insertion (land pattern size on chip type) to avoid stress on the terminals.

(4) Ensure that the auto insertion equipment lead clinching operation does not stress the capacitor leads where they enter the seal of the capacitor.

For chip type capacitors, excessive mounting pressure can cause high leakage current, short circuit, or disconnection.

2.3 Manual Soldering

(1) Observe temperature and time soldering specifications or do not exceed temperatures of 400℃ for 3 seconds or less.

(2) If lead wires must be formed to meet terminal board hole spacing, avoid stress on the lead wire where it enters the capacitor seal.

(3) If a soldered capacitor must be removed and reinserted, avoid excessive stress to the capacitor leads.

(4) Avoid touching the tip of the soldering iron to the capacitor, to prevent melting of the vinyl sleeve.

2.4 Flow Soldering

(1) Do not immerse the capacitor body into the solder bath as excessive internal pressure could result.

(2) Observe proper soldering conditions (temperature, time, etc.) Do not exceed the specified limits.

(3) Do not allow other parts or components to touch the capacitor during soldering.

2.5 Other Soldering Considerations

Rapid temperature rises during the preheat operation and resin bonding operation can cause cracking of the capacitor vinyl sleeve.

For heat curing, do not exceed 150℃ for a maximum time of 2 minutes.

2.6 Capacitor Handling after Solder

(1). Avoid movement of the capacitor after soldering to prevent excessive stress on the lead wires where they enter the seal.

(2). Do not use capacitor as a handle when moving the circuit board assembly.

(3). Avoid striking the capacitor after assembly to prevent failure due to excessive shock.

2.7 Circuit Board Cleaning

* (1) Circuit boards can be immersed or ultrasonically cleaned using suitable cleaning solvents for up 5 minutes and up to 60℃ maximum temperatures. The boards should be thoroughly rinsed and dried.
  The use of ozone depleting cleaning agents is not recommended in the interest of protecting the environment.
* (2) Avoid using the following solvent groups unless specifically allowed for in the specification;
  . Halogenated cleaning solvents: except for solvent resistant capacitor types, halogenated solvents can permeate the seal and cause internal capacitor corrosion and failure. For solvent resistant capacitors, carefully follow the temperature and time requirements of the specification. 1-1-1 trichloroethane should never be used on any aluminum electrolytic capacitor.
  . Alkali solvents : could attack and dissolve the aluminum case.
  . Petroleum based solvents: deterioration of the rubber seal could result.
  . Xylene : deterioration of the rubber seal could result.
  . Acetone : removal of the ink markings on the vinyl sleeve could result.
* (3) A thorough drying after cleaning is required to remove residual cleaning solvents which may be trapped between the capacitor and the circuit board. Avoid drying temperatures, which exceed the maximum rated temperature of the capacitor.
* (4) Monitor the contamination levels of the cleaning solvents during use by electrical conductivity, pH, specific gravity, or water content. Chlorine levels can rise with contamination and adversely affect the performance of the capacitor.
  Please consult us for additional information about acceptable cleaning solvents or cleaning methods.

2.8 Mounting Adhesives and Coating Agents

When using mounting adhesives or coating agents to control humidity, avoid using materials containing halogenated solvents. Also, avoid the use of chloroprene based polymers.

After applying adhesives or coatings, dry thoroughly to prevent residual solvents from being trapped between the capacitor and the circuit board.

3. Precautions for using capacitors

3.1 Environmental Conditions

Capacitors should not be stored or used in the following environments.

* (1) Temperature exposure above the maximum rated or below the minimum rated temperature of the capacitor.
* (2) Direct contact with water, salt water, or oil.
* (3) High humidity conditions where water could condense on the capacitor.

* (4) Exposure to toxic gases such as hydrogen sulfide, sulfuric acid, nitric acid chlorine, or ammonia.
* (5) Exposure to ozone, radiation, or ultraviolet rays.
* (6) Vibration and shock conditions exceeding specified requirements.

3.2 Electrical Precautions

(1) Avoid touching the terminals of the capacitor as possible electric shock could result. The exposed aluminum case is not insulated and could also cause electric shock if touched.

(2) Avoid short circuit the area between the capacitor terminals with conductive materials including liquids such as acids or alkaline solutions.

4. Emergency Procedures

(1) If the pressure relief vent of the capacitor operates, immediately turn off the equipment and disconnect form the power source. This will minimize additional damage caused by the vaporizing electrolyte.

(2) Avoid contact with the escaping electrolyte gas which can exceed 100℃ temperatures.
If electrolyte or gas enters the eye, immediately flush the eyes with large amounts of water.
If electrolyte or gas is ingested by month, gargle with water.
If electrolyte contacts the skin, wash with soap and water.

5. Long Term Storage

Leakage current of a capacitor increases with long storage times. The aluminum oxide film deteriorates as a function of temperature and time. If used without reconditioning, an abnormally high current will be required to restore the oxide film. This current surge could cause the circuit or the capacitor to fail.

After one year, a capacitor should be reconditioned by applying rated voltage in series with a 1000Ω,current limiting resistor for a time period of 30 minutes .

If the expired date of products date code is over eighteen months, the products should be return to confirmation.

5.1 Environmental Conditions

The capacitor shall be not use in the following condition:

(1) Temperature exposure above the maximum rated or below the minimum rated temperature of the capacitor.
(2) Direct contact with water, salt water, or oil.
(3) High humidity conditions where water could condense on the capacitor.
(4) Exposure to toxic gases such as hydrogen sulfide, sulfuric acid, nitric acid, chlorine, or ammonia.
(5) Exposure to ozone, radiation, or ultraviolet rays.
(6) Vibration and shock conditions exceeding specified requirements.

6. Capacitor Disposal

When disposing of capacitors, use one of the following methods.

* Incinerate after crushing the capacitor or puncturing the can wall (to prevent explosion due to internal pressure rise). Capacitors should be incinerated at high temperatures to prevent the release of toxic gases such as chlorine from the polyvinyl chloride sleeve, etc.
* Dispose of as solid waste.

NOTE: Local laws may have specific disposal requirements, which must be followed.