RoHS2.0+REACH

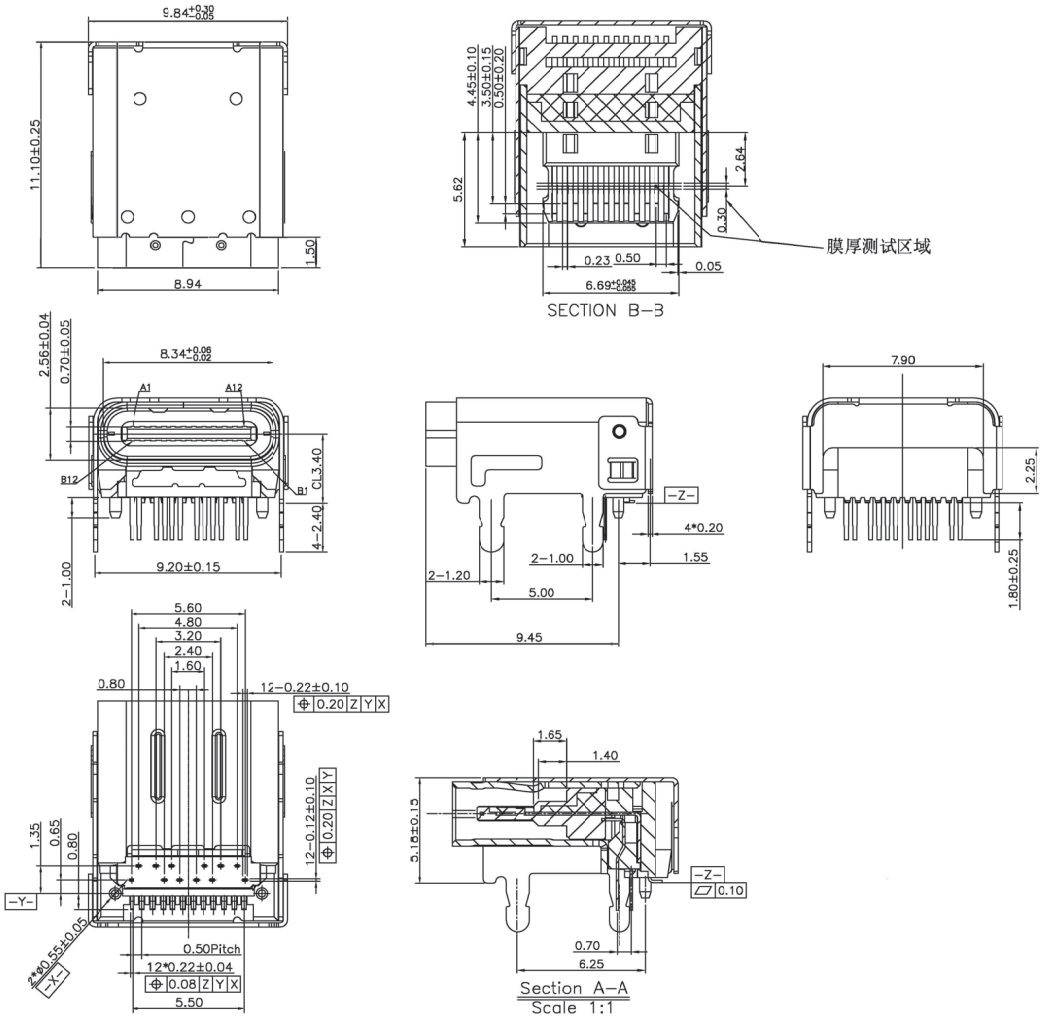

NOTES:
1.MATERIAL:
MOLDING: LCP UL94 V-0
CONTACT:COPPER ALLOY.
PLATED GOLD ON CANTACT AREA,
G/F GOLD ON SOLDER AREA,
50u" NICKEL PLATING OVER ALL.
OUTER SHELL: SUS304,T=0.20±0.03mm
50u" NICKEL PLATING OVER ALL.
G/F FOOT BRUSHING GOLD
INNER SHELL:SUS304,T=0.30±0.03mm
50u" NICKEL PLATING OVER ALL.
LATCH:SUS301,T=0.15±0.03mm
2.MECHANICAL:
INSERTION: 5~20N.
EXTRACTION: 8~20N.
DURABILITY: 10000 CYCLES
3.ELECTRICAL:
CURRENT: 5A MAX FOR VBUS;
1.25A FOR GND,0.25A FOR OTHER OTHER.
VOLTAGE: 20VDC MAX
WITHSTANDING VOLTAGE: 100V AC.
CONTACT RESISTANCE: 40mΩ MAX.
INSULATION RESISTANCE: 100MΩ MIN.
4.ENVIRONMENTAL
TEMPERATURE RANGE -40°C ~ +85°C

NO.	DATE	DESCRIPTION	DRAWING
5.0			
4.0			
3.0			
2.0			
1.0			

DRAWING: Frank
CHECKED: yangjie
APPROVAL:

GENERAL TOLERANCE
.X:=±0.30 .X°:=±2°
.XX:=±0.25 .XX°:=±1°
.XXX:=±0.15 .XXX°:=±0.5°

UNIT: MM
PROJECTION:
SCALE: 1:1
SHEET: 1/1

CHIN-BAN Electronic Technology

DESCRIPTION: 板上DIP+SMT CL3.40 PH5.0 外壳脚长2.40
PART NO: USB30-AF-026
OLD CODE: USBC1-AF-026
DRAWING NO:
REV: 1.0
SIZE: A4

RoHS2.0+REACH

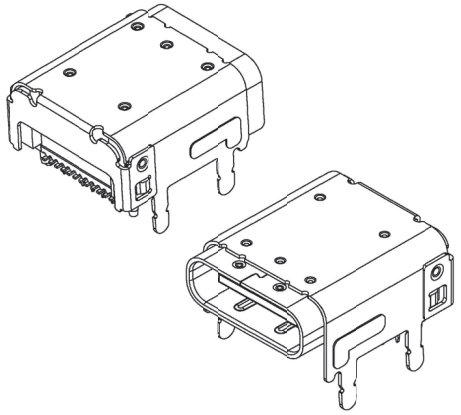

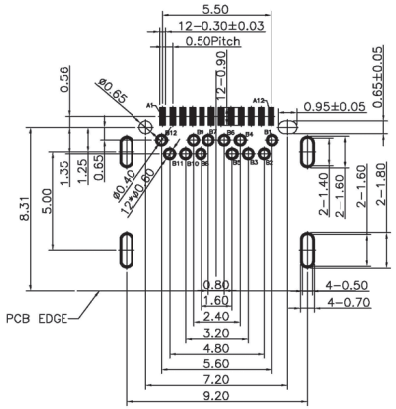

RECOMMENDED PCB LAYOUT(COMPONENT SIDE)

PCB THICKNESS: 1.60±0.05
DEFAULT TOLERANCE: ±0.05

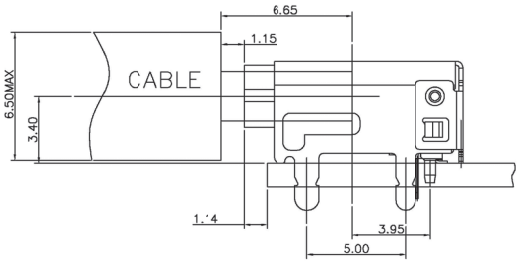

USB TYPE-C FULL-FEATURED RECEPTACLE INTERFACE PIN ASSIGNMENTS

PIN	Signal Name	Description	PIN	Signal Name	Description
A1	GND	Ground return	B12	GND	Ground return
A2	SSTXp1	Positive half of first SuperSpeed TX differential pair	B11	SSRXp1	Positive half of first SuperSpeed RX differential pair
A3	SSTXn1	Negative half of first SuperSpeed TX differential pair	B10	SSRXn1	Negative half of first SuperSpeed RX differential pair
A4	VBUS	Bus Power	B9	VBUS	Bus Power
A5	CC1	Configuration Channel	B8	SBU2	Sideband Use (SBU)
A6	Dp1	Positive half of the USB 2.0 differential pair-Position 1	B7	Dn2	Negative half of the USB 2.0 differential pair-Positior 2
A7	Dn1	Negative half of the USB 2.0 differential pair-Position 1	B6	Dp2	Positive half of the USB 2.0 differential pair-Positior 2
A8	SBU1	Sideband Use(SBU)	B5	CC2	Configuraation Channel
A9	VBUS	Bus Power	B4	VBUS	Bus Power
A10	SSRXn2	Negative half of second SuperSpeed RX differential pair	B3	SSTXn2	Negative half of second SuperSpeed TX differential pair
A11	SSRXp2	Positive half of second SuperSpeed RX differential pair	B2	SSTXp2	Positive half of second SuperSpeed TX differential pair
A12	GND	Ground return	B1	GND	Ground return

NO.	DESCRIPTION	QTY	MATERAL	SPECIFICATION
8	UPPER CONTACT	12	COPPER ALLOY	PLATED GOLD ON CANTACT AREA, G/F, GOLD ON SOLDER AREA, 50u" NICKEL PLATING OVER ALL.
7	LOWER CONTACT	12		
6	LOWER IM	1	THERMOPLASTIC UL 94V-0	COLOR: BLACK
5	UPPER IM	1	THERMOPLASTIC UL 94V-0	COLOR: BLACK
4	OVERMOLD	1	THERMOPLASTIC UL 94V-0	COLOR: BLACK
3	SHIELD PLATE	1	STAINLESS STEEL	CLEAN
2	INNER SHELL	1	STAINLESS STEEL	NICKEL PLATING OVER ALL.
1	OUTER SHELL	1	STAINLESS STEEL	NICKEL PLATING OVER ALL , AU AT SCLDER TAIL

NO.	DATE	DESCRIPTION	DRAWING
5.0			
4.0			
3.0			
2.0			
1.0			

DRAWING: Frank

CHECKED: yangjie

APPROVAL:

GENERAL TOLERANCE

.X:=±0.30 .X°:=±2°
.XX:=±0.25 .XX°:=±1°
.XXX:=±0.15 .XXX°:=±0.5°

UNIT: MM

PROJECTION:

SCALE: 1:1

SHEET: 1/1

CHIN-BAN Electronic Technology

DESCRIPTION: 板上DIP+SMT CL3.40 PH5.0 外壳脚长2.40

PART NO: USB30-AF-026

REV: 1.0

OLD CODE: USBC1-AF-026

DRAWING NO:

SIZE: A4