汇 隆 电 子 (金 华) 有 限 公 司
HUILONG ELECTRONIC (JINHUA) CO.,LTD

SPECIFICATION FOR APPROVAL

CUSTOMER _____

NOMINAL FREQUENCY 25.000000 MHz

HOLDER TYPE **HC-49US**

SPEC. NO. (P/N) HA25000A007

CUSTOMER P/N _____

ISSUE DATE Mar.2,2019

APPROVED	PREPARED	QA
彭达梅	金文波	陈全根
APPROVED BY CUSTOMER：		**AVL Status**
Please return one copy with approval toHLC		

浙江省金華市經濟開發區工業園區秋濤北街399號
No.399 Qiutao North Str.,Industrial Area,Economic Development Zone,Jinhua,Zhejiang,China
TEL: 0086-579-82273331
FAX: 0086-579-82273198
http://www.cn-hlc.com

ISO9001
ISO14001

RoHS Compliant (Pb- Free)

TYPE HL SEAM SEALED X'TAL

ELECTRICAL SPECIFICATIONS

HLC Parts Number : **HA25000A007**

Item	Symbol	Specifications				Notes
		Min	Type	Max	Units	
Nominal frequency	FO		25.000000		MHz	
Mode of Oscillation	OT		Fundamental			
Load Capacitance	LC		20		pF	
Frequency Tolerance	FT		± 16		ppm	at 25℃ ± 3℃
Frequency Stability			± 30		ppm	with working temperature Reference to 25℃
Working temperature range	TR		-20~70		℃	
Drive Level	DL		100		μW	
Series Resonant Resistance F	CI/RR		20		Ω	Max.
Shunt Capacitance C0	C0		7		pF	
DLD			8		Ω	Max,0.01~300UW,20 point
FDLD			8		ppm	Max.
SPDB			-3		DB	Max,±5000PPM,50 point
Aging			±5		ppm/yr.	
Storage temperature range			-50 ~ 105		℃	
Unit Weight					g	

TYPE HL SEAM SEALED X'TAL

MARKING

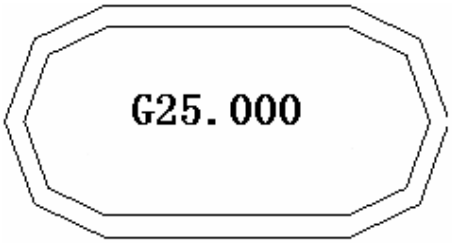

TYPE HL SEAM SEALED X'TAL

RELIABILITY SPECIFICATIONS

NO.	TEST ITEM	TEST METHODS	
1	DROP TEST	Device are dropped from a height of 75 cm onto 3 mm thick wood to perform 3 times of random drops.	
2	MECHANICAL SHOCK	Device are shocked to half sine wave (1000 G) three mutually perpendicular axes each 3 times.	
3	VIBRATION	Frequency range	10 ~ 2000 Hz
		Amplitude	1.5 mm
		Sweep Time	20 minute
		Test Time	2 hours
4	SOLDERABILITY	MIL - STD - 20E Method 208C	
		Temperature	245℃±5℃
		Material	H63A (Silver 2 ~ 3 %)
		Immersion depth	0.5 mm minimum
		Immersion time	3 ± 0.5 seconds
		Flux	Rosin resin methyl alcohol solvent (1 : 4)
5	RESISTANCE TO SOLDERING HEAT	MIL - SLD -202, Method 210, Condition I or J 10 sec immersion into 260 ± 5℃ solder pot, above 180℃ is 90 ~ 120 sec.	
6	LOW TEMP. STORAGE	Leave at - 55 ℃ ± 2℃ for 1000 ± 12 hours	
7	HIGH TEMP. STORAGE	Leave at 125 ℃ ± 2℃ for 1000 ± 12 hours	
8	THERMAL SHOCK	Total 100 cycles of the following temperature cycle	

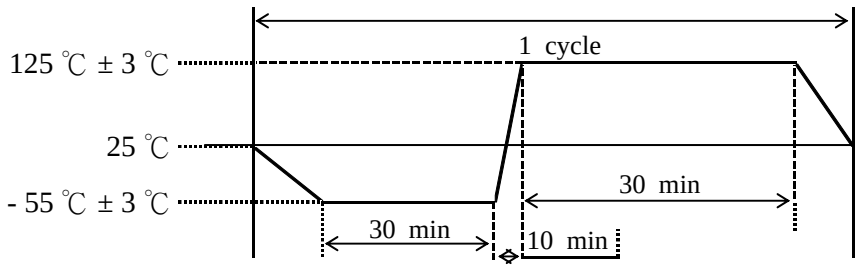

TYPE HL SEAM SEALED X'TAL

DIMENSIONS

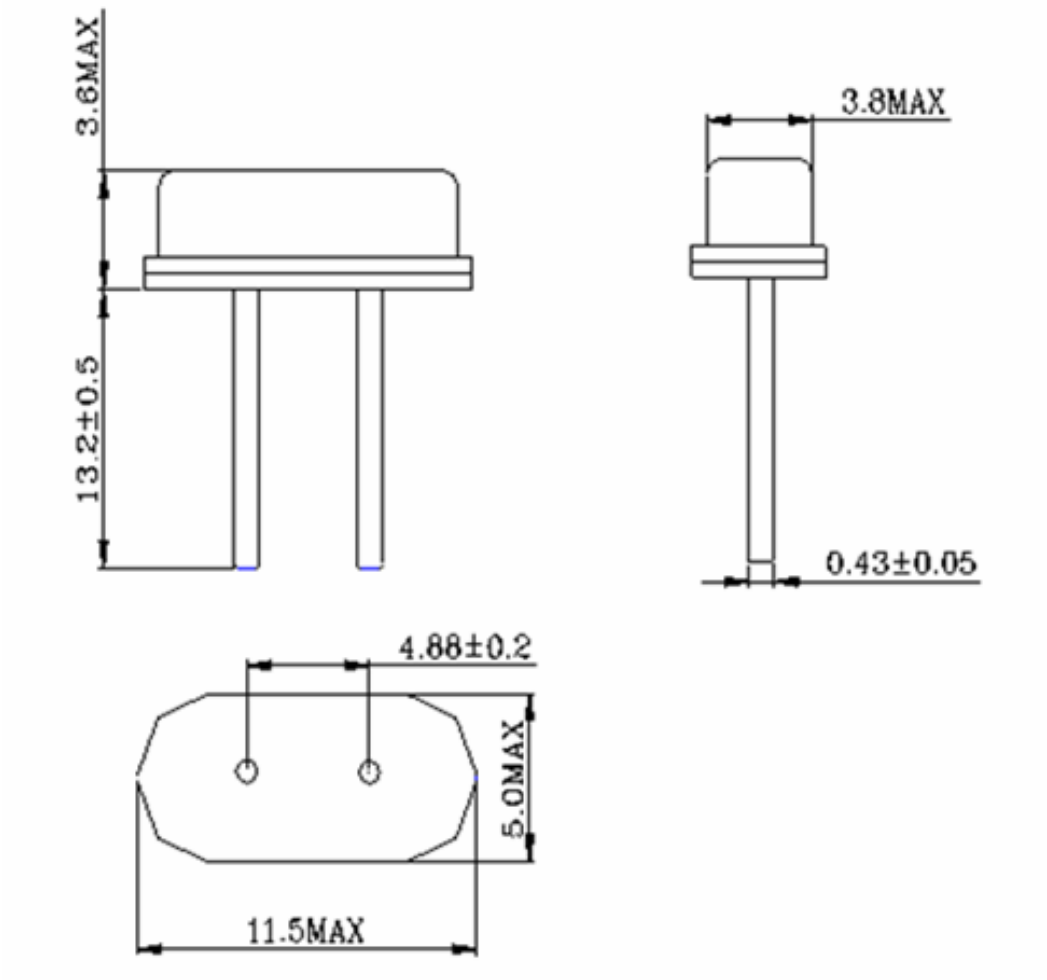

Inner structure

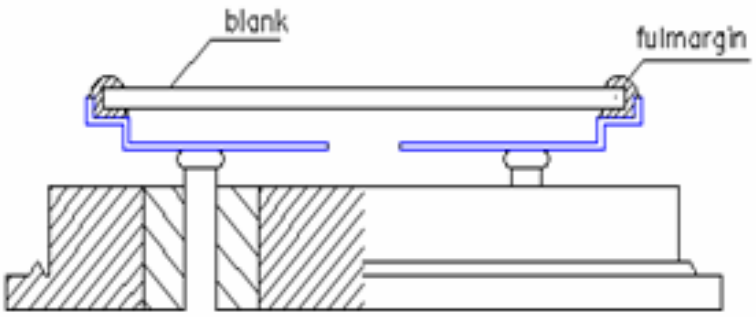

TYPE HL SEAM SEALED X'TAL

SUGGESTED IR REFLOW PROFILE

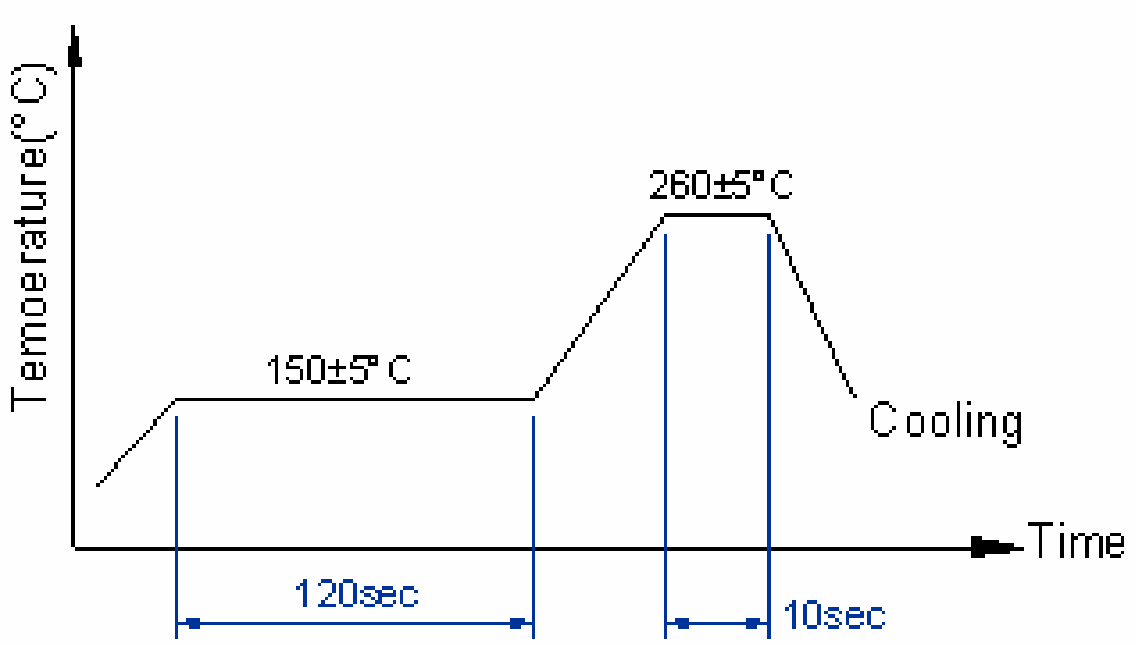

Total Time：200 Sec.Max
Solder melting point ：185℃

PACKING

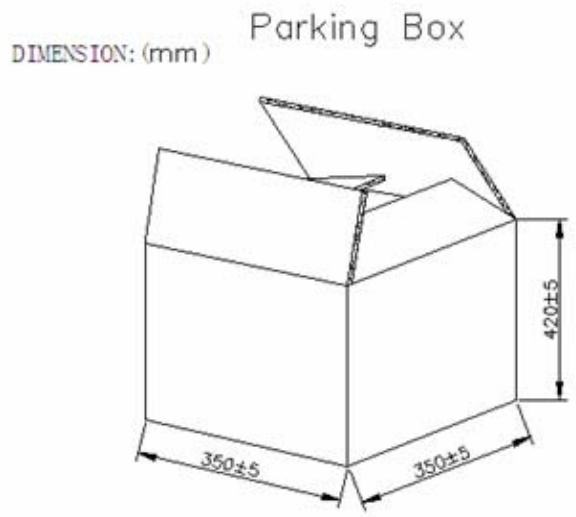

Packing quantity:1000pcs per box and 10 000pcs per container .