浙 江 汇 隆 晶 片 技 术 有 限 公 司

Zhejiang Huilong Crystals Technology Co.,Ltd

SPECIFICATION FOR APPROVAL

CUSTOMER	
NOMINAL FREQUENCY	13.521270 MHz
HOLDER TYPE	**3225**
SPEC. NO. (P/N)	HL13521001
CUSTOMER P/N	
ISSUE DATE	Jan.8,2025

APPROVED	PREPARED	QA
SMD 2025.01.08 辜批林	SMD 2025.01.08 张梅娟	SMD 2025.01.08 韩丽丽
APPROVED BY CUSTOMER:		**AVL Status**
Please return one copy with approval toHLC		

浙江省金华市婺城区秋滨街道新宏路895号
No. 895 Xinhong Road, Qiubin Street, Wucheng District,
Jinhua City, Zhejiang Province,China
TEL: 0086-579-82273331
FAX: 0086-579-82273198
http://www.cn-hlc.com

ISO9001
ISO14001

RoHS PASS

RoHS Compliant (Pb- Free)

TYPE HL SEAM SEALED X'TAL

ELECTRICAL SPECIFICATIONS

HLC Parts Number : **HL13521001**

Item	Symbol	Specifications				Notes
		Min	Type	Max	Units	
Nominal frequency	FO		13.521270		MHz	
Mode of Oscillation	OT		Fundamental			
Load Capacitance	CL		10		pF	
Frequency Tolerance	FT		± 10		ppm	at 25℃ ± 3℃
Frequency Stability			± 30		ppm	with working temperature Reference to 25℃ frequency
Working temperature range	TR		-40~85		℃	
Drive Level	DL		100		μW	
Series Resonant Resistance RR	CI/RR		60		Ω	Max.
Insulation Resistance	IR		>500		MΩ	
Shunt Capacitance C0	C0		3		pF	Max.
Aging			± 3		ppm/yr.	
Storage temperature range			-55 ~ 125		℃	

TYPE HL SEAM SEALED X'TAL

MARKING

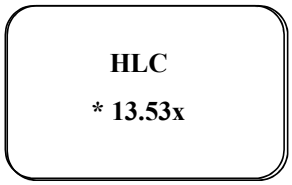

HLC: HLC Use Code x: CL Code x: Date Code

CL	Code	CL	Code	CL	Code
0pf	0	7.5pf	H	11.2pf	a
6pf	1	11pf	I	11.4pf	b
8pf	2	8.5pf	J	13.5pf	d
10pf	3	7.1pf	K	20.5pf	e
12pf	5	19pf	L	8.8pf	f
15pf	6	12.5pf	M	17pf	g
16pf	7	27pf	N	4.3pf	h
18pf	8	7.3pf	O	9.9pf	i
20pf	9	13pf	P	24pf	j
22pf	A	11.5pf	Q	9.4pf	m
25pf	B	7pf	R	8.2pf	n
28pf	C	14pf	S	6.8pf	q
30pf	D	23pf	T	90pf	r
32pf	E	11.1pf	U	5.6pf	t
9.5pf	F	33pf	V	5pf	u
9pf	G	10.5pf	W		
		9.2pf	Y		
		50pf	Z		

Jan-23	N	Jan-24	A
Feb-23	P	Feb-24	B
Mar-23	Q	Mar-24	C
Apr-23	R	Apr-24	D
May-23	S	May-24	E
Jun-23	T	Jun-24	F
Jul-23	U	Jul-24	G
Aug-23	V	Aug-24	H
Sep-23	W	Sep-24	J
Oct-23	X	Oct-24	K
Nov-23	Y	Nov-24	L
Dec-23	Z	Dec-24	M

备注：年份印字代码原则按奇偶年两年一个循环

TYPE HL SEAM SEALED X'TAL

RELIABILITY SPECIFICATIONS

NO.	TEST ITEM	TEST METHODS	
1	DROP TEST	Device are dropped from a height of 150 cm onto 2 mm thickness stainless plate executing 3 times of random drops.	
2	MECHANICAL SHOCK	Device are shocked to half sine wave (1000 G) three mutually perpendicular axes each 3 times.	
3	VIBRATION	Frequency range	10 ~ 2000 Hz
		Amplitude	1.5 mm
		Sweep Time	20 minute
		Test Time	2 hours
4	SOLDERABILITY	MIL - STD - 20E Method 208C	
		Temperature	245℃±5℃
		Material	H63A (Silver 2 ~ 3 %)
		Immersion depth	0.5 mm minimum
		Immersion time	3 ± 0.5 seconds
		Flux	Rosin resin methyl alcohol solvent (1 : 4)
5	RESISTANCE TO SOLDERING HEAT	MIL - SLD -202, Method 210, Condition I or J 10 sec immersion into 260 ± 5℃ solder pot, above 180℃ is 90 ~ 120 sec.	
6	LOW TEMP. STORAGE	Leave at - 40 ℃ ± 2℃ for 16 hours	
7	HIGH TEMP. STORAGE	Leave at 125 ℃ ± 3℃ for 72 hours	
8	THERMAL SHOCK	Total 100 cycles of the following temperature cycle	

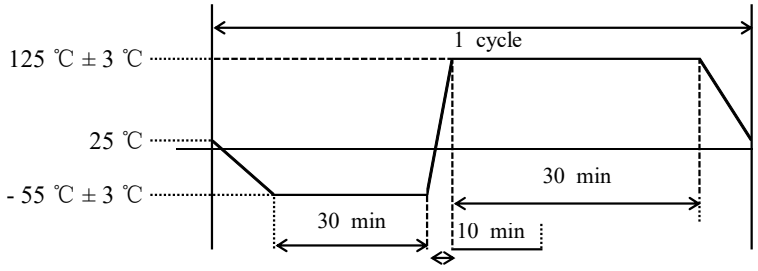

TYPE HL SEAM SEALED X'TAL

DIMENSIONS

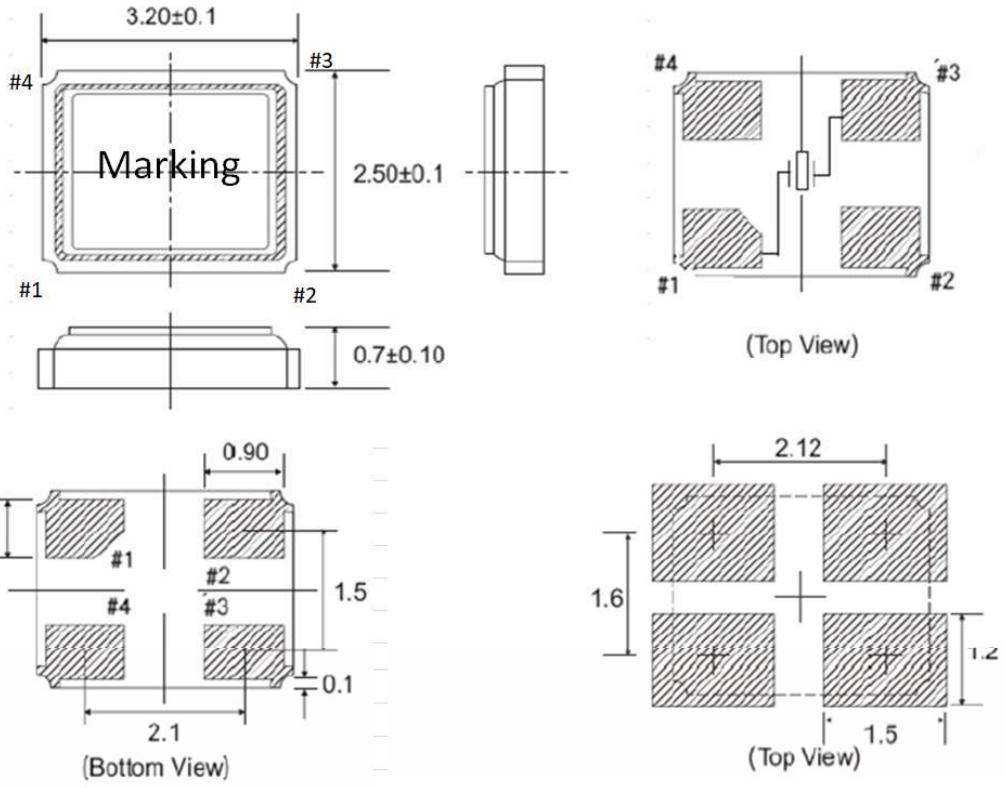

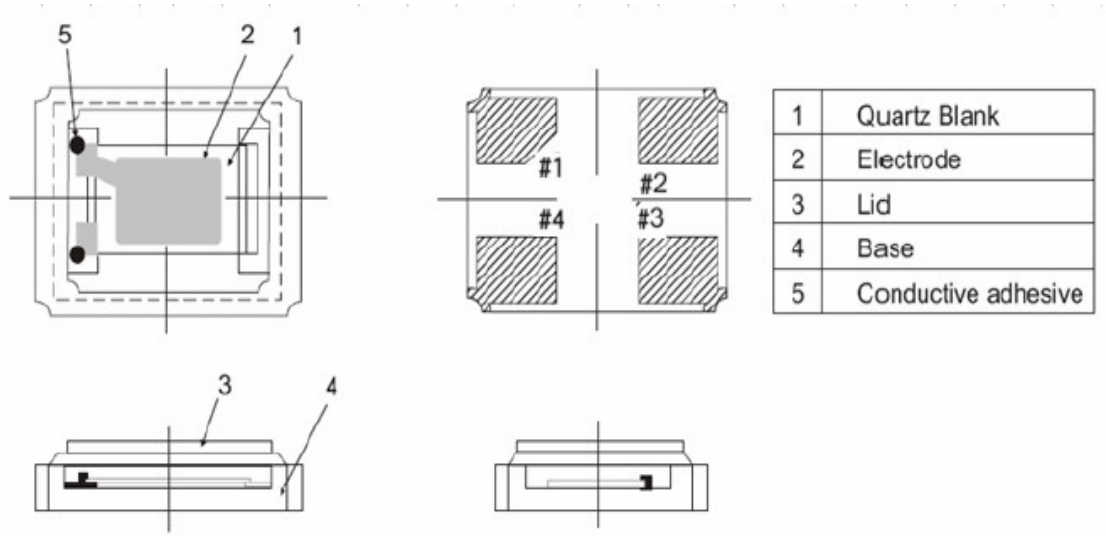

1	Quartz Blank
2	Electrode
3	Lid
4	Base
5	Conductive adhesive

TYPE HL SEAM SEALED X'TAL

SUGGESTED IR REFLOW PROFILE

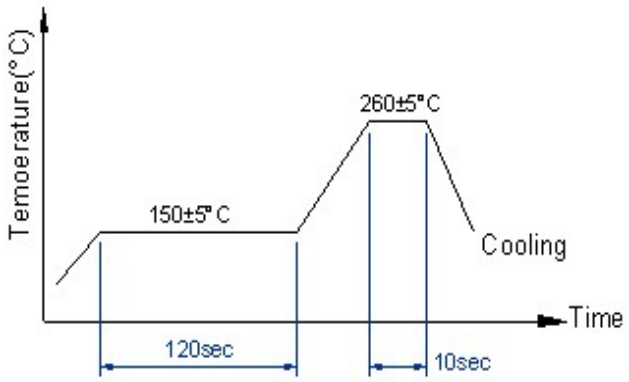

Total Time：200 Sec.Max

Solder melting point ： 185℃

PACKING

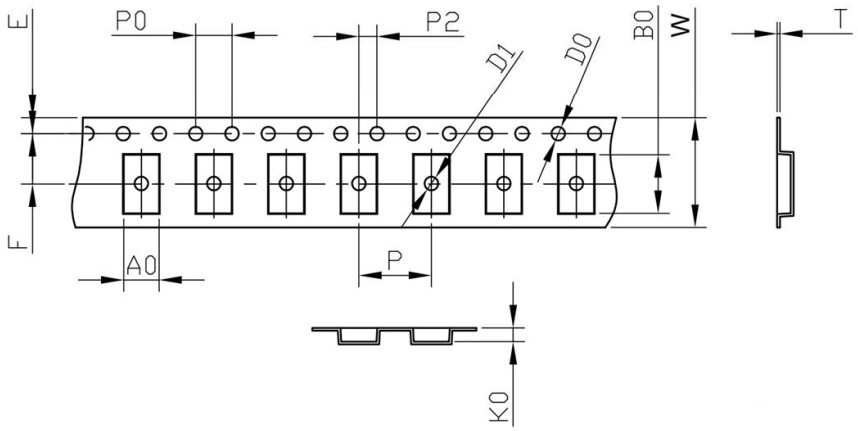

	W	A_0	B_0	K_0	E	F	P	P_0	P_2	D_0	D_1	T
3225	8.0±0.3	2.70±0.1	3.40±0.1	0.80±0.1	1.75±0.1	3.5±0.1	4.0±0.1	4.0±0.1	2.0±0.1	1.55±0.05	1.0±0.1	0.25±0.05

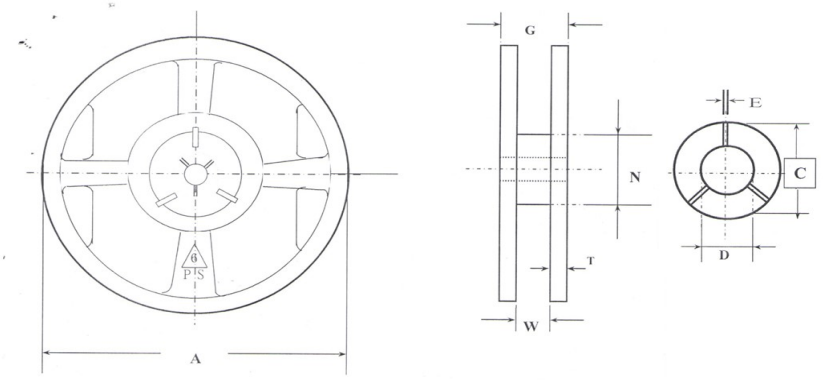

	A	W	T	N	C	D	E	G
3225	178±2.0	9.5±0.5	1.4±0.2	60.2±0.5	20.2±1.0	13.2±0.5	2.5±0.5	12±1.4

1. 230mm minimum leafer which consist of carrier and/or tape followed by a minimum of 160mm of empty carrier tape sealed with cover tape.
2. 160mm minimum trailer of empty carrier tape sealed with cover tape.

TYPE HL SEAM SEALED X'TAL

PACKING

