Features

- Low power consumption:10uA (Typ.)
- Low voltage drop:
  0.11V@100mA@VOUT=2.8V(Typ.)
- Standby Mode: 0.1uA
- Low temperature coefficient
- Good line Regulation:0.05%/V
- High Ripple Rejection: 75dB@100Hz(Typ.)
- High input voltage (up to 6.5V)
- Output voltage accuracy: tolerance ±2%
- SOT-153 packages

Applications

- Battery-powered equipment
- Communication equipment
- Mobile phones
- Portable games
- Cameras, Video cameras
- Reference voltage sources

General Description

The Y6212B series are highly accurate, low noise, CMOS LDO Voltage Regulators. Offering low output noise, high ripple rejection ratio, low dropout and very fast turn-on times, the Y6212B series is ideal for today's cutting edge mobile phone. Internally the Y6212B includes a reference voltage source, error amplifiers, driver transistors, current limiters and phase compensators.

The Y6212B's output voltage is set by current trimming. Voltages are selectable in 100mV steps within a range of 0.9V to 5.0V.

When the CE input pin is low, the fast discharge channel can pass，a built-in pull-down resistor pulls the output voltage low. Fast discharge function.

The Y6212B series is also fully compatible with low ESR ceramic capacitors, reducing cost and improving output stability. This high level of output stability is maintained even during frequent load fluctuations, due to the excellent transient response performance and high PSRR achieved across a broad range of frequencies. The CE function allows the output of regulator to be turned off, resulting in greatly reduced power consumption.

Order Information

Y6212B-①②③④

Designator	Symbol	Description
①②	Integer	Output Voltage
③	M5	Package: SOT-153
④	R	RoHS / Pb Free
	G	Halogen Free

Note:"①②" stands for output voltages. Other voltages can be specially customized

Block Diagram

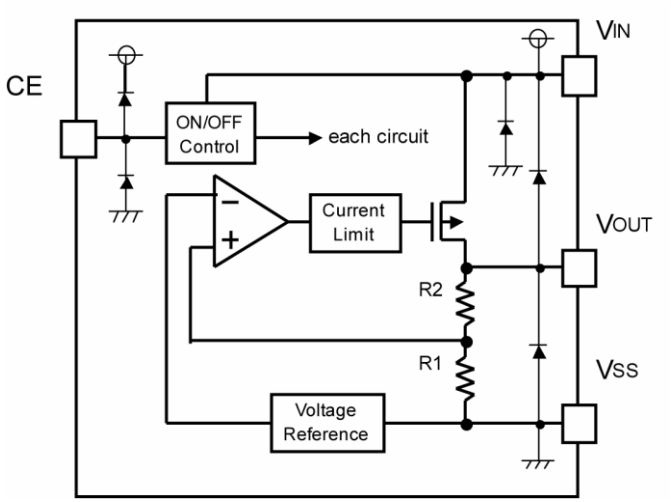

Package and Pin assignment

SOT-153(Top View)

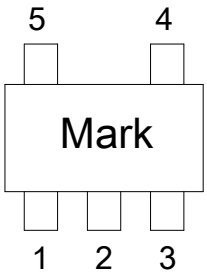

Table1: Y6212B-XXM5R series (SOT-153 PKG)

PIN NO	PIN NAME	FUNCTION
1	VIN	Input
2	GND	Ground
3	EN	Enable(Active high, not floating)
4	NC	Not connected
5	VOUT	Output

Marking Rule

MARKING	
VOLTAGE(V)	Package
	SOT-153
1.2	LVBX
1.5	LVEX
1.8	LVKX
2.5	LVFX
2.8	LVXX
3.0	LVZX
3.3	LV2X

Absolute Maximum Ratings

Supply Voltage .....-0.3V to 8V Storage Temperature .....-50℃ to 125℃

Operating Temperature .....-40℃ to 85℃

Note: These are stress ratings only. Stresses exceeding the range specified under “Absolute Maximum Ratings” may cause substantial damage to the device. Functional operation of this device at other conditions beyond those listed in the specification is not implied and prolonged exposure to extreme conditions may affect device reliability.

Thermal Information

Symbol	Parameter	Package	Max.	Unit
θ_{JA}	Thermal Resistance (Junction to Ambient) (Assume no ambient airflow, no heat sink)	SOT-153	260	℃/W
P_D	Power Dissipation	SOT-153	0.4	W

Note: P_D is measured at Ta= 25℃

Electrical Characteristics

Y6212B series （Ta=25℃）

Parameter	Symbol	Conditions	Min.	Typ.	Max.	Unit
Output Voltage	Vout≤2.5V	Vin=Vout+1V 1.0mA≤Iout≤100mA	Vout -0.05		Vout +0.05	V
	2.5V≤Vout≤5V	Vin=Vout+1V 1.0mA≤Iout≤300mA	Vout×0.98	--	Vout×1.02	V
Output Current*1	Iout	Vin-Vout=1V	--	300	--	mA
Line Regulation	△Vout1/ (△Vin·Vout)	4.3V≤Vin≤8V Iout=10mA	--	0.05	0.2	%/V
Load Regulation	△Vout	Vin= 4.3V 1.0mA≤Iout≤100mA	--	15	40	mV
Dropout Voltage	V_{DROP}	Iout=100mA	--	0.11	--	V
Output voltage Temperature Coefficiency	△Vout/(Ta·Vout)	Iout=30mA 0℃≤Ta≤70℃	--	±100	--	Ppm/℃
Supply Current	Iss	--	--	10	15	uA
Input Voltage	Vin	--	--	--	6.5	V
EN ligic high voltage	V_{ENH}	VIN=5.0V	1.5	--	--	V
EN logic low voltage	V_{ENL}	VIN=5.0V	--	--	0.4	V
PSRR	PSRR	F=100Hz, Vin=（VOUT+1） dc+1Vpp	--	75	--	dB
		F=1000Hz, Vin=（VOUT+1） dc+1Vpp	--	65	--	dB

Typical Application Circuit

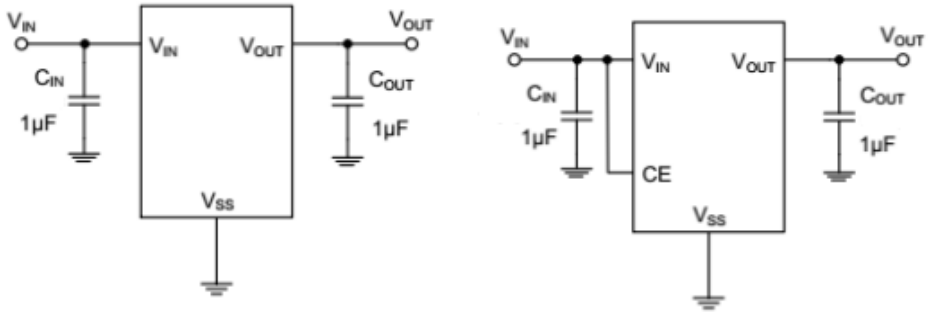

Operational Explanation

<Low ESR Capacitors>

With the Y6212B series, a stable output voltage is achievable even if used with low ESR capacitors as a phase compensation circuit is built-in. In order to ensure the effectiveness of the phase compensation, we suggest that an output capacitor (C_L) is connected as close as possible to the output pin (V_{OUT}) and the V_{SS} pin. Please use an output capacitor with a capacitance value of at least 10uF. Also, please connect an input capacitor (C_{IN}) of 10uF between the V_{IN} pin and the V_{SS} pin in order to ensure a stable power input. Stable phase compensation may not be ensured if the capacitor runs out capacitance when depending on bias and temperature. In case the capacitor depends on the bias and temperature, please make sure the capacitor can ensure the actual capacitance.

<CE Pin>

The IC's internal circuitry can be shutdown by the signal from the CE pin with the Y6212B series. In shutdown mode, output at the V_{OUT} pin will be pulled down to the V_{SS}. Although the CE pin is equal to an inverter input with CMOS hysteresis, with either the pull-up or pull-down options, the CE pin input current will increase when the IC is in operation. If you want add resistor before the CE pin，the resistor must be under 10K. We suggest that you use this IC with either a V_{IN} voltage or a V_{SS} voltage input at the CE pin. If this IC is used with the correct specifications for the CE pin, the operational logic is fixed and the IC will operate normally. However, supply current may increase as a result of through current in the IC's internal circuitry.

Notes on Use

1. Please use this IC within the stated absolute maximum ratings. The IC is liable to malfunction should the ratings be exceeded.
2. Where wiring impedance is high, operations may become unstable due to noise and/or phase lag depending on output current. Please keep the resistance low between VIN and VSS wiring in particular.
3. Please wire the input capacitor (CIN) and the output capacitor (CL) as close to the IC as possible.

Packaging Information

SOT-153 Outline Dimensions

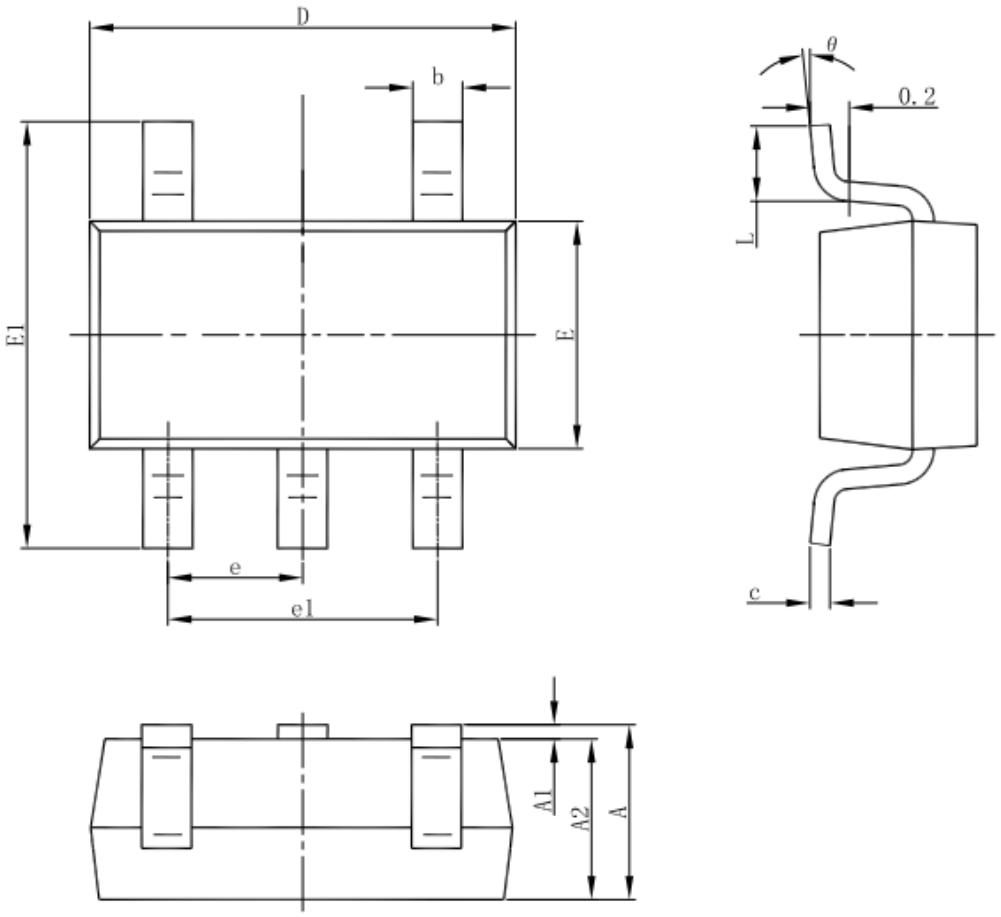

Symbol	Dimensions In Millimeters		Dimensions In Inches	
	Min	Max	Min	Max
A	1.050	1.250	0.041	0.049
A1	0.000	0.100	0.000	0.004
A2	1.050	1.150	0.041	0.045
b	0.300	0.500	0.012	0.020
c	0.100	0.200	0.004	0.008
D	2.820	3.020	0.111	0.119
E	1.500	1.700	0.059	0.067
E1	2.650	2.950	0.104	0.116
e	0.950(BSC)		0.037(BSC)	
e1	1.800	2.000	0.071	0.079
L	0.300	0.600	0.012	0.024
θ	0°	8°	0°	8°