Product Specification

深圳市臺華達科技有限公司

SHENZHENSHI THD Electronics Co., Ltd.

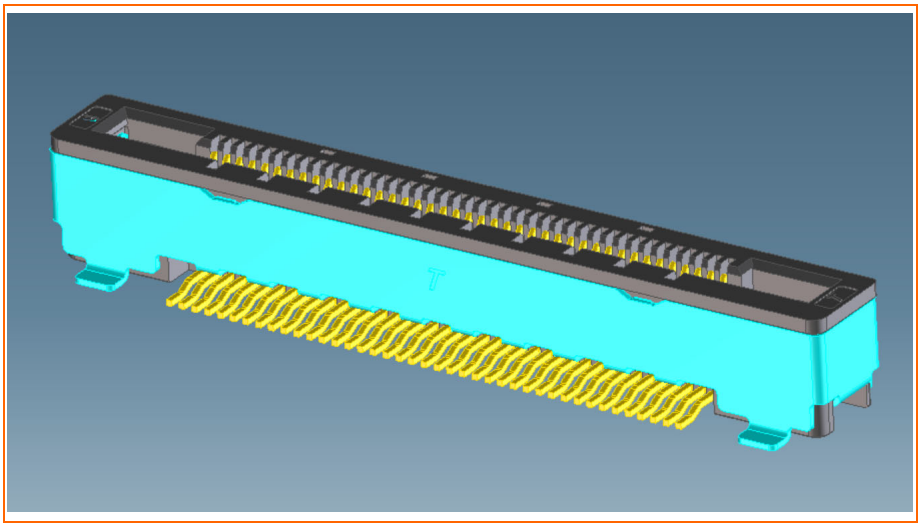

Product.No

THD-LVDS－41RV－GF

Pitch=0.5mm LVDS Connector

A	Release
Rev.	Description

Approved Signatures	
■Prepared By : Gary	■Date: 2025.05.16
■Checked By : Kavin	■Date: 2025.05.16
■Approved By : JIM	■Date: 2025.05.16

■Scope

This specification covers the 0.5 mm Pitch LVDS Connector **THDLVDS** series.

■Ordering information

THDLVDS - 41 RV - GF

❶ ❷ ❸ ❹

❶	Series name：THDLVDS	❹	Plating： GF= 1μ"~3μ" Gold Flash G3= 3μ" Gold over Nickel G5= 5μ" Gold over Nickel SN= Tin(Lead Free) over Nickel
❷	Number of contacts：41		
❸	Contact type：Right/ VERTICAL		

■Rating

Item	Standard
Voltage Rating(Max.)	50V AC
Current Rating(Max.)	0.5A DC
Operating Temperature Range	-55°C ~ +85°C (Including terminal temperature rise)

■Material

Housing	Actuator	Terminal	Solder pin	SHELL
L.C.P (UL94V-0) Black	/	Copper alloy	/	Stainless steel

■Performance

Item	Test Condition	Specification	
Contact Resistance	Subject mated contacts assembled in housing to 20mV Max open circuit at 100mA Max. EIA-364-23B.	50 mΩ Max. (Signal) 40 mΩ Max. (Ground)	
Insulation Resistance	Test voltage 500V DC. Test between adjacent circuits of unmated connector. EIA-364-21C.	100 MΩ Min.	
Dielectric Strength	250V AC for 1 minute Test between adjacent circuits of unmated connector. EIA-364-20B	No flashover or insulation Breakdown	
Contact retention force	Measure the contact retention force with Tensile strength tester. Operation Speed：25.4 mm/min.	RECEPTACLE: per pinX0.15N MIN. PLUG:0.6N MIN.	
Cable retention force	Measure the cable retention force with Tensile strength tester. Operation Speed：25.4 mm/min.	14.7N MIN.	
Total Insertion and Withdrawal Force	Apply axial pull out force at the rate of 25±3 mm/minute on the terminal assembled in the housing.	Insertion Force: 22.5N Max. Withdrawal Force: 3.0N MIN.	
Temperature rising	Mate plug and receptacle connector together, then apply rating current per signal contact.	ΔT:30℃ Max.	
Durability	Operation Speed：25.4 mm/min. Durability Cycles：30 Cycles EIA-364-09C	Appearance Contact Resistance	No Damage 100 mΩ Max.
Vibration	Subject mated connectors to 10-55-10 Hz traversed in 1 min. at single amplitude 1.52 mm, 2 hrs for 3 Directions EIA-364-28D	Appearance Contact Resistance Discontinuity	No Damage 100 mΩ Max. 1 μsec Max.
Mechanical Shock	Accelerate Velocity：490m/s2 （50G） Waveform：Half-sine shock plus Duration：11 ms EIA-364-27B	Appearance Contact Resistance Discontinuity	No Damage 100 mΩ Max. 1 μsec Max.
Salt Spray	Subject mated connectors to 35+/-2℃ and 5+/-1% salt condition for 48hours(for Contact area). After test, rinse the sample with water and recondition the room temperature for 1 hour. EIA-364-26B.	Appearance Contact Resistance	No Damage 100 mΩ Max.

Item	Test Condition	Specification	
Heat Resistance	Subject mated connectors expose to 85±2°C for 96 hours. Upon completion of the exposure period, the test specimens shall be conditioned at ambient room conditions for 1 to 2 hours, after which the specified measurements shall be performed.	Appearance	No Damage
		Contact Resistance	100 mΩ Max.
Cold Resistance	Subject mated connectors expose to -40±2°C for 96 hours. Upon completion of the exposure period, the test specimens shall be conditioned at ambient room conditions for 1 to 2 hours, after which the specified measurements shall be performed.	Appearance	No Damage
		Contact Resistance	100 mΩ Max.
Humidity	Subject mated connectors expose to 40 ± 2°C, relative humidity 90 to 95% for 96 hours. Upon completion of the exposure period, the test specimens shall be conditioned at ambient room conditions for 1 to 2 hours, after which the specified measurements shall be performed.	Appearance	No Damage
		Contact Resistance	100 mΩ Max.
		Dielectric Strength	No Breakdown
		Insulation Resistance	100 MΩ Min.
Temperature Cycling	Subject mated connectors to the following conditions for 5 cycles. Upon completion of the exposure period, the test specimens shall be conditioned at ambient room conditions for 1 to 2 hours, after which the specified measurements shall be performed. 1 cycle a) -55±3°C 30minutes b) +85±3°C 30minutes (Transit time shall be with in 3 minutes)	Appearance	No Damage
		Contact Resistance	100 mΩ Max.
		Insulation Resistance	100 MΩ Min.
Solderability	After dipping in the flux for 5-10sec Soldering time : 5 ± 0.5sec Soldering temperature : 245 ± 5℃	Solder Wetting	The inspected area of each lead must have 95% solder coverage minimum.
Resistance to Soldering	When reflowing refer to Infrared reflow condition *Soldering iron method* 0.2mm from terminal tip and fitting nail tip. Soldering time : 5 seconds Max. Solder temperature : 370～400°C	Appearance	No Damage

■Recommended Temperature Profile

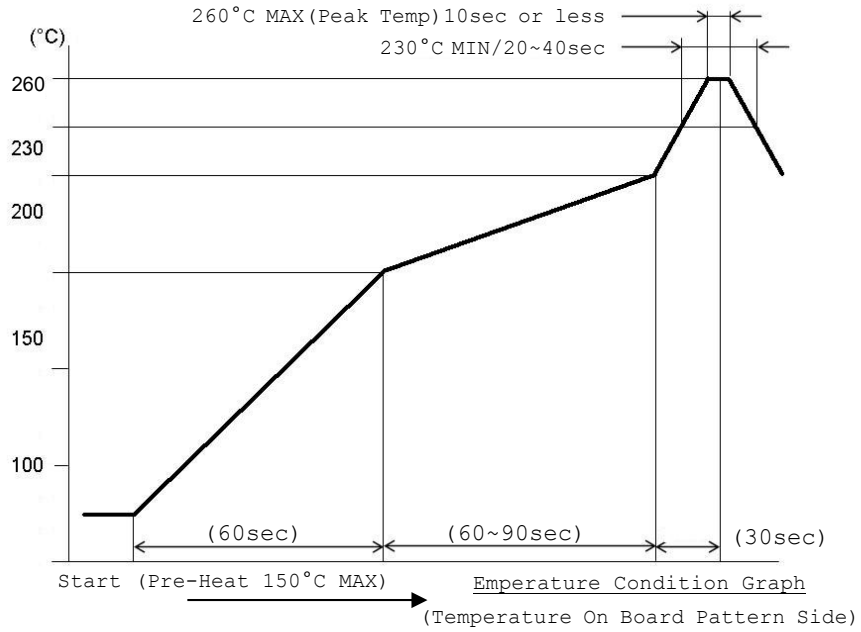

RoHS Compliant 2011/65/EU

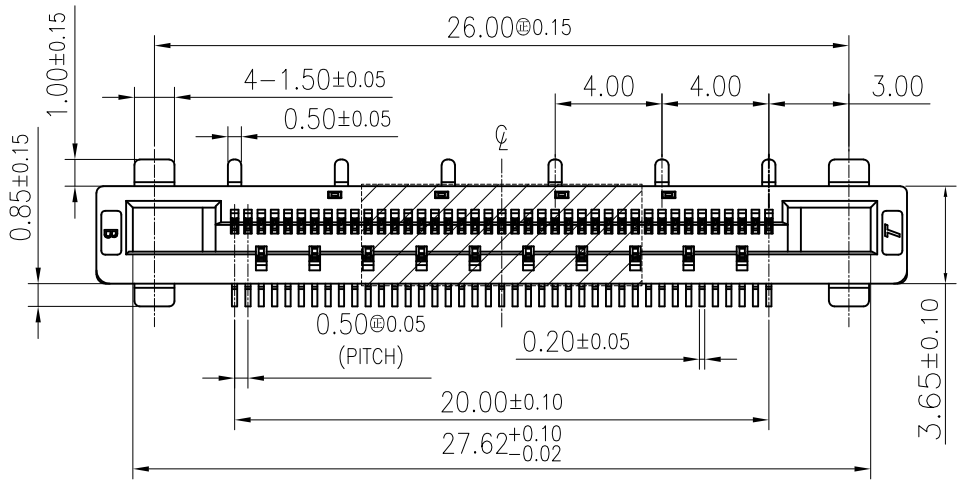

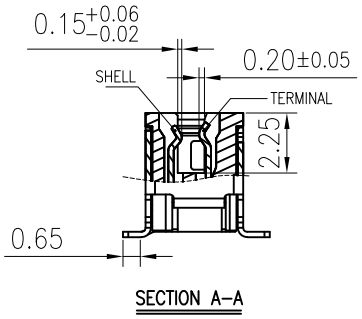

SECTION A-A

NOTES:

1.HUOSING: LCP HIGH-TEMP THERMOPLASTIC UL94V-0 COLOR:BLACK

2.TERMINAL:COPPER ALLOY T=0.2mm

PLATING:50u" MIN NICKEL ALL OVER 100u"MIN Tin ON SOLDER AREA
1u"GOLD FLASH ON CONTACT AREA

3.SHELL:STAINLESS STEEL T=0.2mm

PLATING:100~150u"TIN(LEAD FREE)
OVERALL 50~100u"NICKEL UNDER PLATED.

4.SPECIFICATION:

CURRENT RATING: 0.5A 50V AC/DC

CONTACT RESISTANCE: 50mΩ MAX

INSULATION RESISTANCE: 100MΩ AT 500V DC

OPERATING TEMPERATURE RANGE: -55°C~+85°C

WITHSTANDING VOLTANG: 250V AC/minute

5.CODING INFORMATION: THD-LVDS-41RV-GF

- GF: TERMINAL PLATING
- 41: NO. OF CONTACTS
- RV: 0.5PITCH 4.65H V/C SMT Connector
- LVDS: CONNECTOR SERIES
- THD: CONNECTOR SERIES

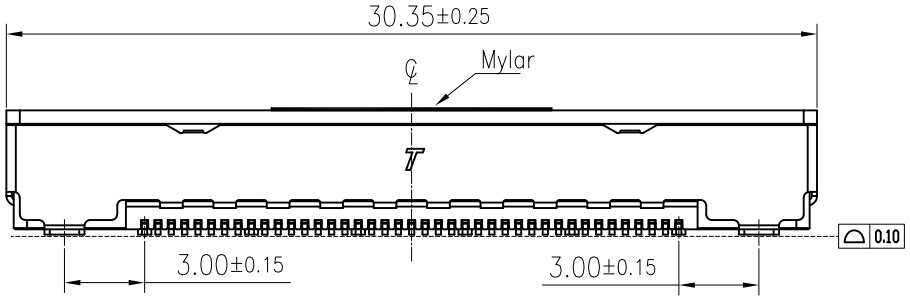

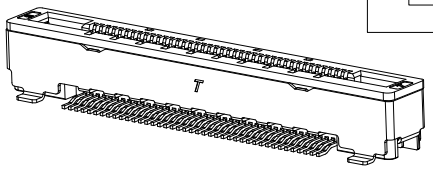

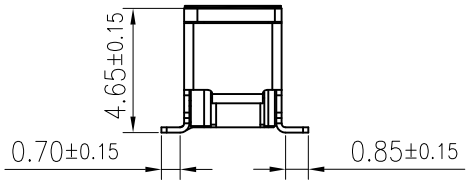

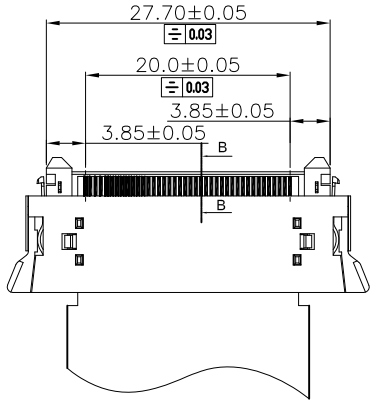

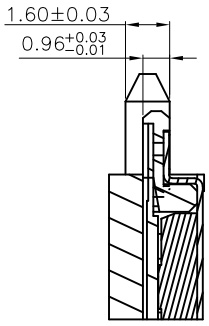

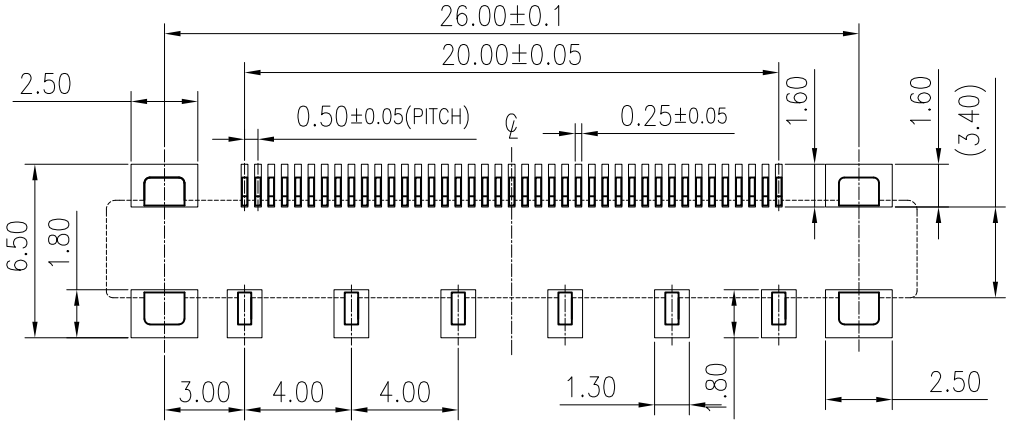

RECOMMEND P.C.B LAYOUT
TOLERANCE : ±0.05

REV.	REVISIONS	CHK	DATE

CUSTOMER

深圳市臺華達科技有限公司
SHE ZHE SHI THD TECH OLOGY CO. LTD.

GENERAL TOLERANCE UNLESS OTHERWISE SPECIFIED

X.X	±0.25
X.XX	±0.20
X.XXX	±0.15
ANG.	±2°

DRAWN:	Kavin	2025.04.28
CHECKED:	胡文	2025.04.28
APPROVED:	gm	2025.04.28

PART NO. THD-LVDS-41RV-GF

TITLE: 0.5PITCH 4.65H LVDS VERTICAL CONTACTSMT CONN.

SHEET:	UNIT:	SCALE:	SIZE:	REV:
1/2	mm	1:1	A4	A

RoHS Compliant 2011/65/EU

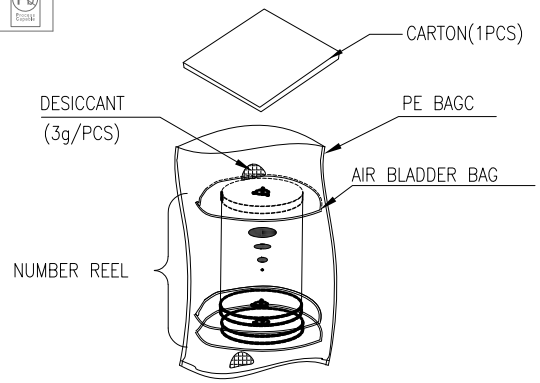

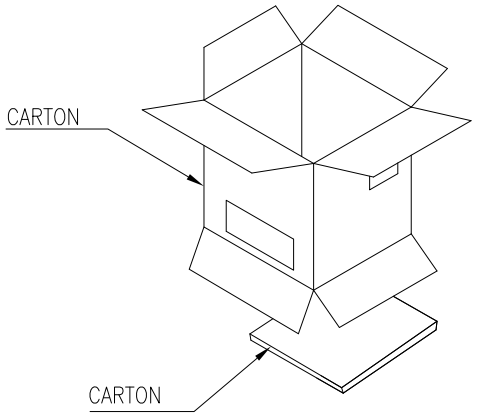

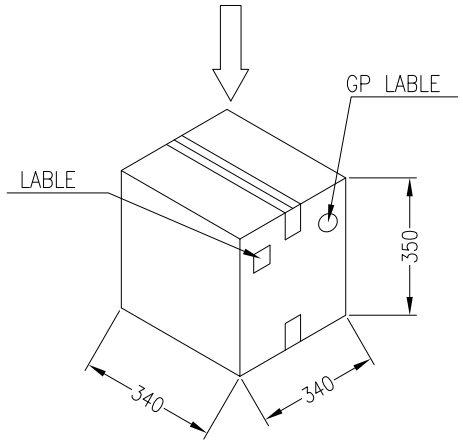

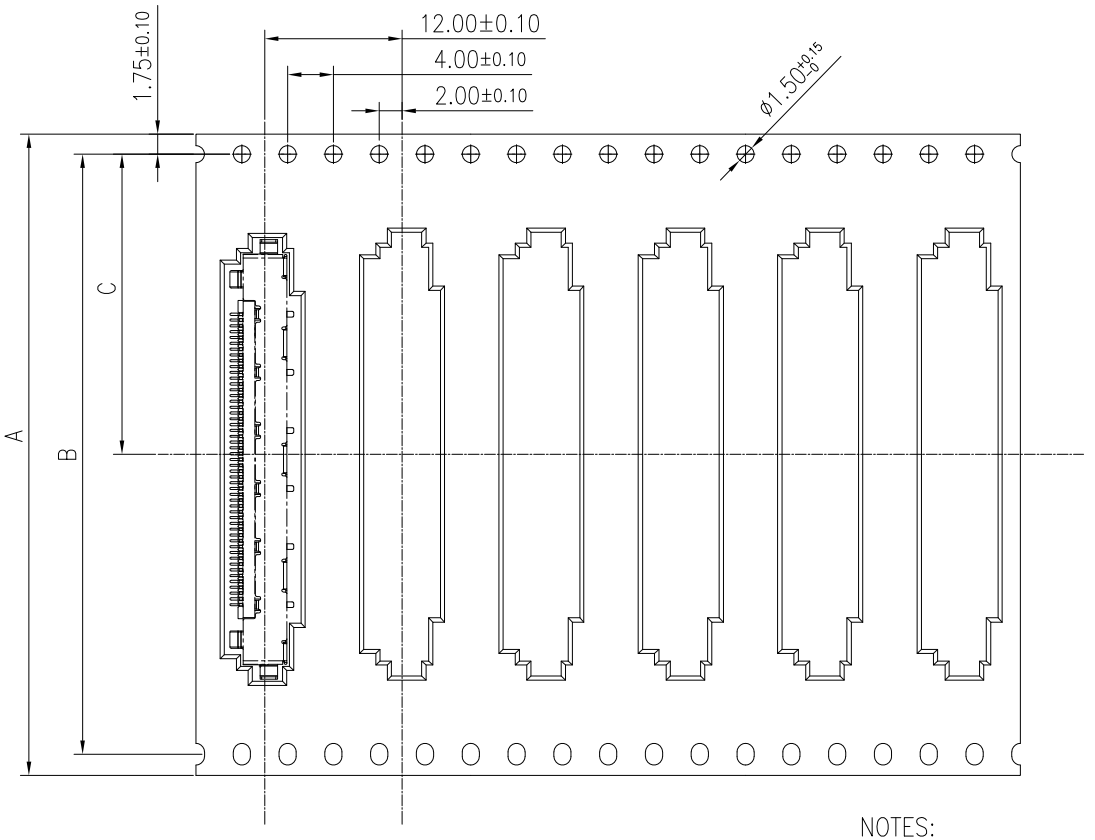

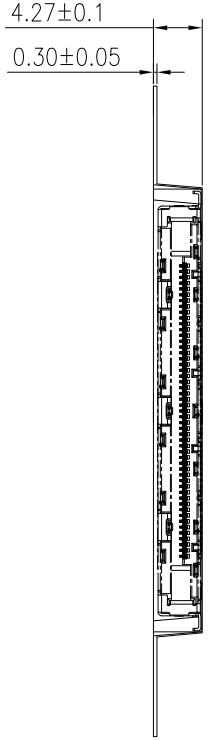

NOTES:

1.Component load per 13" reel:1000 pcs
2.Material: white conductive polystyrene alloy.
3.Thickness:0.4±0.05mm
4.All dimensions meet EIA-481-C requirements

REEL DIM

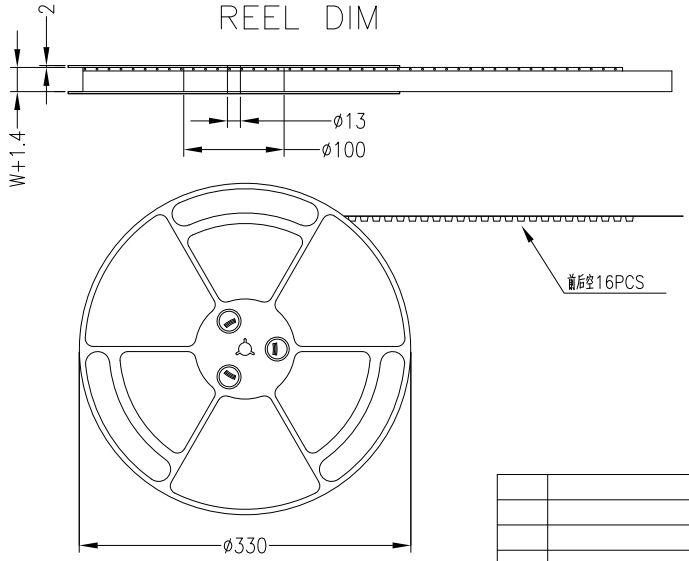

No.of	DIM				
Contacts	A	B	C	REEL (CARTON)	SUM(PCS)
THD-LVDS-41RV-GF	56	26.25	52.5	5	5000

REV.	REVISIONS	CHK	DATE

CUSTOMER

深圳市臺華達科技有限公司
SHE ZHE SHI THD TECH OLOGY CO. LTD.

GENERAL TOLERANCE UNLESS OTHERWISE SPECIFIED

X.X	±0.25
X.XX	±0.20
X.XXX	±0.10
ANG.	±3°

DRAWN: Kavin 2025.04.26
CHECKED: 胡文 2025.04.26
APPROVED: 2025.04.26

PART NO. THD-LVDS-41RV-GF
TITLE: 0.5PITCH 4.65H LVDS CONTACT R/A SMT CONN.

SHEET: 1/1 | UNIT: mm | SCALE: 1:1 | SIZE: A4 | REV: A