PTD3020

30V/25A N-Channel Advanced Power MOSFET

Features

- Improved dv/dt Capability, High Ruggedness·
- Maximum Junction Temperature Range (150°C)
- 100% Avalanche Tested

BVDSS	30	V
ID	25	A
RDSON@VGS=10V	10	mΩ
RDSON@VGS=5V	15	mΩ

Applications

- Load Switch
- PWM Application
- Power management

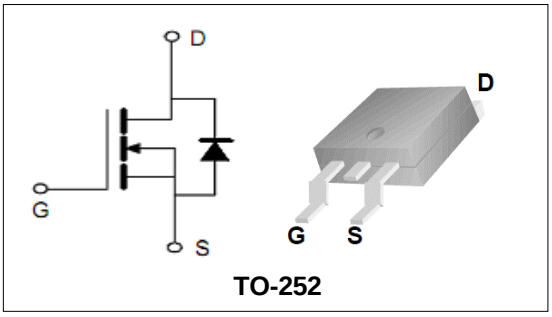

TO-252

Order Information

Product	Package	Marking	Reel Size	Reel	Carton
PTD3020	TO-252	PTD3020	13inch	2500PCS	50000PCS

Absolute Maximum Ratings

Symbol	Parameter		Rating	Unit
Common Ratings (TC=25°C Unless Otherwise Noted)				
$V_{(BR)DSS}$	Drain-Source Breakdown Voltage		30	V
V_{GS}	Gate-Source Voltage		±20	V
T_J	Maximum Junction Temperature		150	°C
T_{STG}	Storage Temperature Range		-55 to 150	°C
I_S	Diode Continuous Forward Current	TC =25°C	20	A
Mounted on Large Heat Sink				
E_{AS}	Single Pulse Avalanche Energy (Note1)		18	mJ
I_{DM}	Pulse Drain Current Tested (Note2)	TC =25°C	100	A
I_D	Continuous Drain current	TC =25°C	25	A
P_D	Maximum Power Dissipation	TC =25°C	28	W
$R_{\theta Jc}$	Thermal Resistance Junction−to−Case (Note3)		4.46	°C/W

30V/25A N-Channel Advanced Power MOSFET

Symbol	Parameter	Condition	Min.	Typ.	Max.	Unit
Static Electrical Characteristics @ TJ = 25°C (unless otherwise stated)						
$V_{(BR)DSS}$	Drain- Source Breakdown Voltage	VGS=0V ID=250μA	30	--	--	V
I_{DSS}	Zero Gate Voltage Drain current	VDS=30V,VGS=0V	--	--	1	μA
I_{GSS}	Gate-Body Leakage Current	VGS=±20V,VDS=0V	--	--	±100	nA
$V_{GS(TH)}$	Gate Threshold Voltage	VDS=VGS,ID=250μA	1	1.5	2.5	V
$R_{DS(ON)}$	Drain-Source On-State Resistance (Note4)	VGS=10V, ID=10A	--	10	13	mΩ
		VGS=4.5V, ID=5A	--	15	22	mΩ
Dynamic Electrical Characteristics @ T_J = 25°C (unless otherwise stated) (Note5)						
C_{iss}	Input Capacitance	VDS=15V, VGS=0V, F=1MHz	--	696	--	pF
C_{oss}	Output Capacitance		--	107	--	pF
C_{rss}	Reverse Transfer Capacitance		--	80	--	pF
Q_g	Total Gate Charge	VDS=15V, ID=15A, VGS=10V	--	15	--	nC
Q_{gs}	Gate-Source Charge		--	3.4	--	nC
Q_{gd}	Gate-Drain Charge		--	3.2	--	nC
Switching Characteristics (Note5)						
$t_{d(on)}$	Turn-on Delay Time	VDD=15V, ID=15A, VGS=10V, RG=3Ω	--	5.7	--	nS
t_r	Turn-on Rise Time		--	14	--	nS
$t_{d(off)}$	Turn-off Delay Time		--	16	--	nS
t_f	Turn-off Fall Time		--	4.7	--	nS
Source- Drain Diode Characteristics@ TJ = 25°C (unless otherwise stated)						
V_{SD}	Forward on voltage	IS=20A,VGS=0V	--	--	1.2	V

Note:

1. Limited by TJmax, starting TJ = 25° C, RG = 25Ω, VD =10V, VGS =10V. Part not recommended for use above this value.
2. Repetitive Rating: Pulse width limited by maximum junction temperature.
3. Surface Mounted on FR4 Board, t ≤ 10 sec.
4. Pulse Test: pulse width ≤ 300 us, duty cycle ≤ 2%.
5. Guranteed by design, not subject to production testing.

30V/25A N-Channel Advanced Power MOSFET

Typical Characteristics

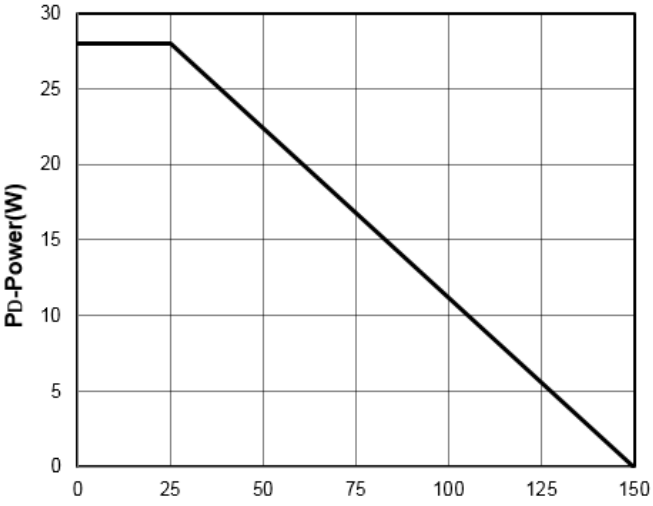

Figure1：T_J -Junction Temperature（°C）

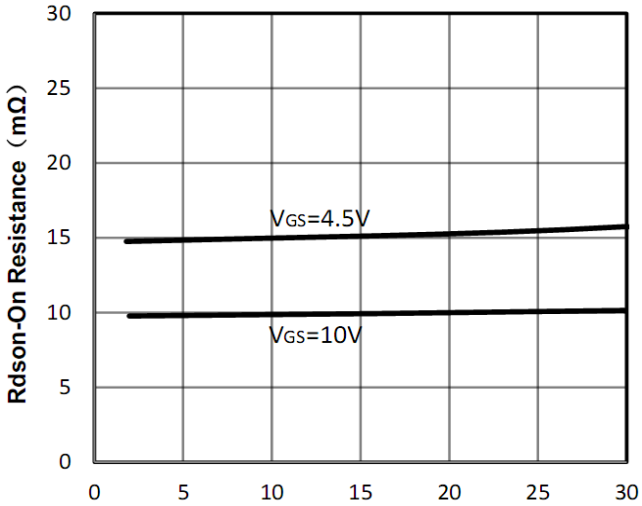

Figure2：I_D -Drain Current（A）

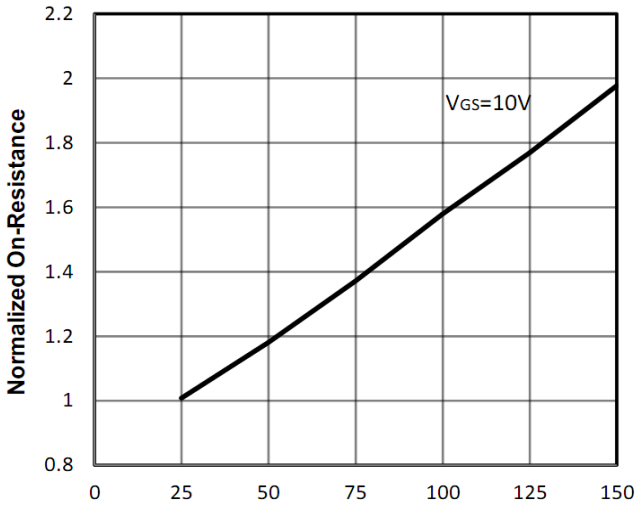

Figure3：T_J -Junction Temperature（°C）

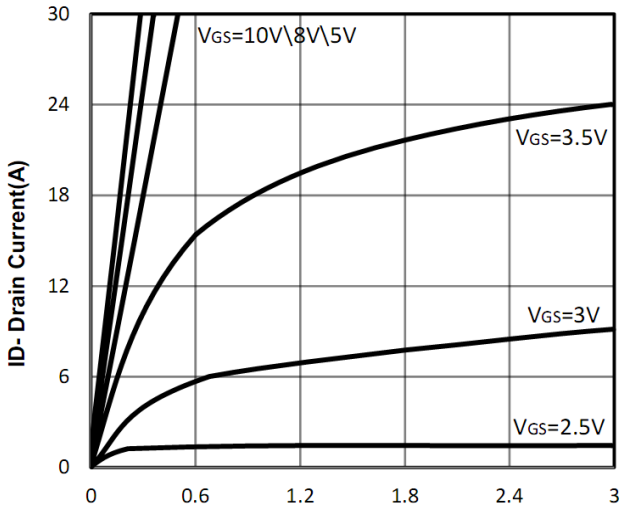

Figure4：V_{DS} -Drain Source Voltage（V）

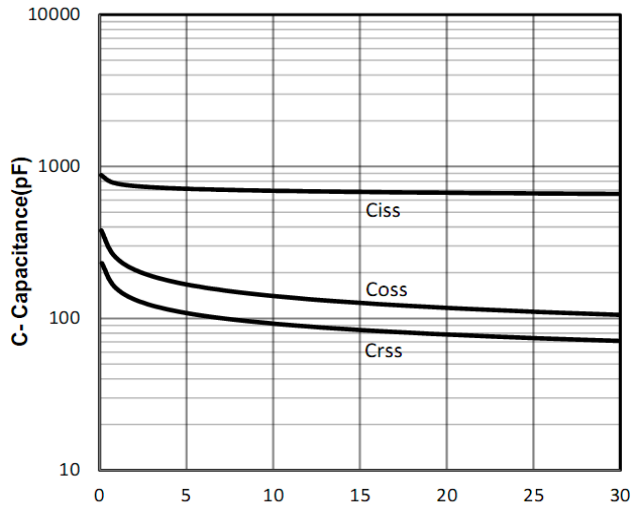

Figure5：V_{DS} –Drain Source Voltage（V）

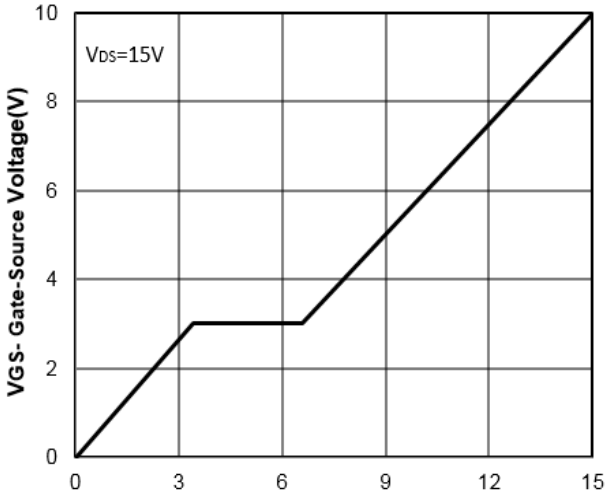

Figure6：Qg -Gate Charge（nC）

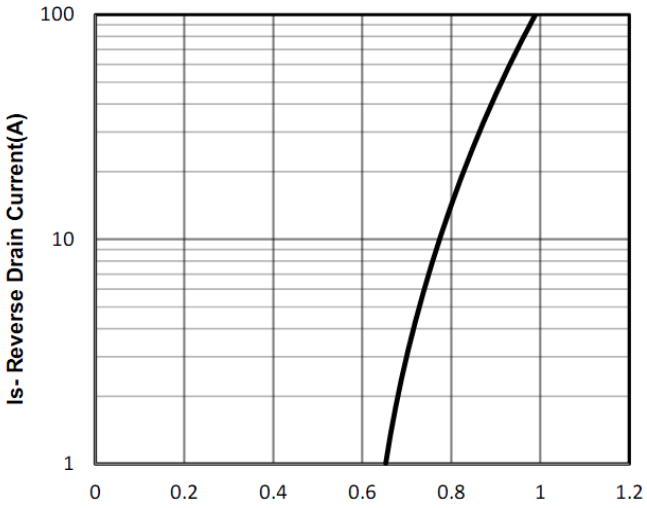

Figure7：Vsd –Source Drain Voltage（V）

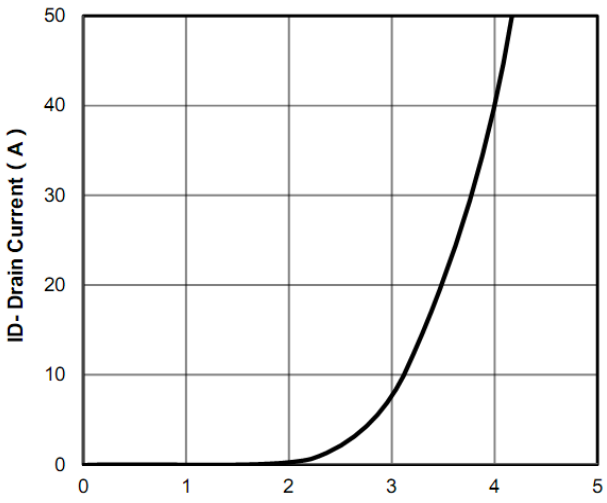

Figure8：Vgs –Gate Source Voltage（V）

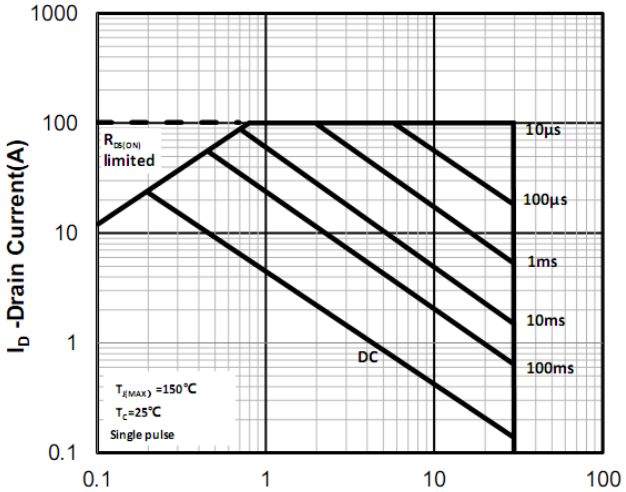

Figure9：VDS -Drain Source Voltage（V）

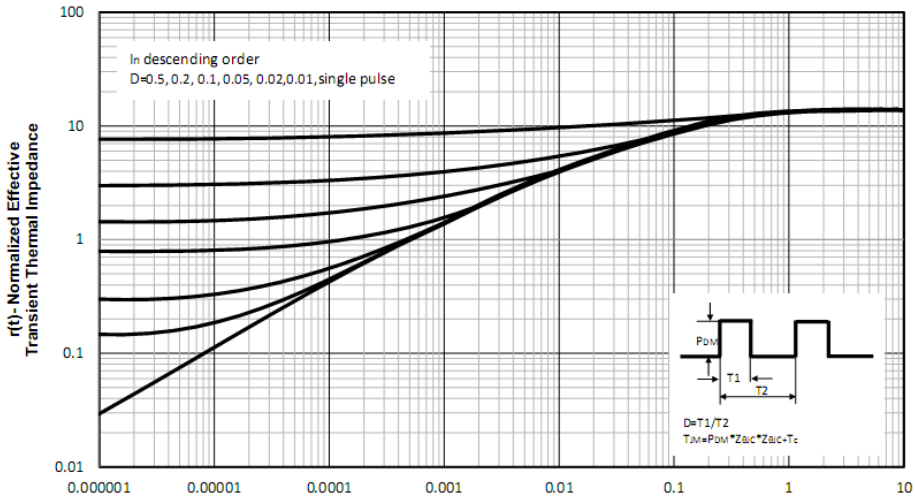

Figure10：Square Wave Pulse Duration（sec）

30V/25A N-Channel Advanced Power MOSFET

Test Circuit and Waveform:

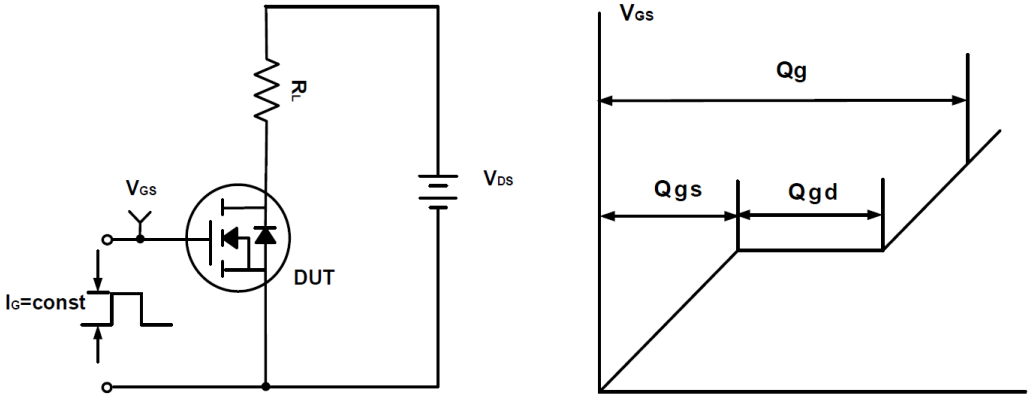

Figure A Gate Charge Test Circuit &Waveforms

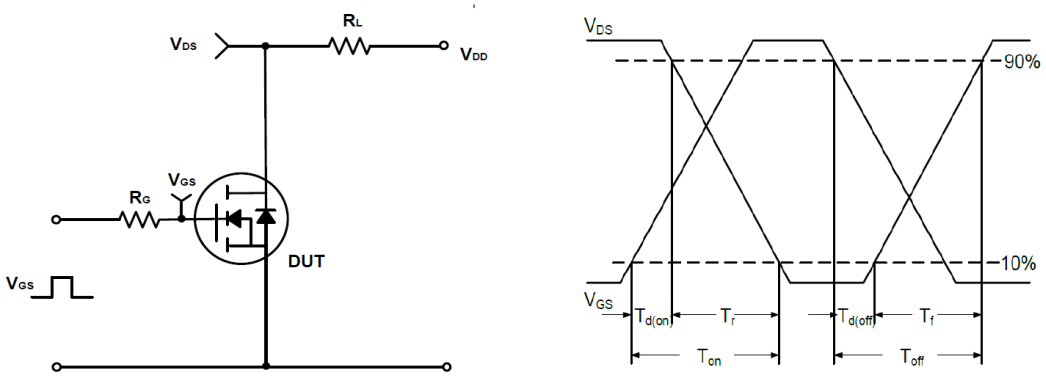

Figure B Switching Test Circuit & Waveforms

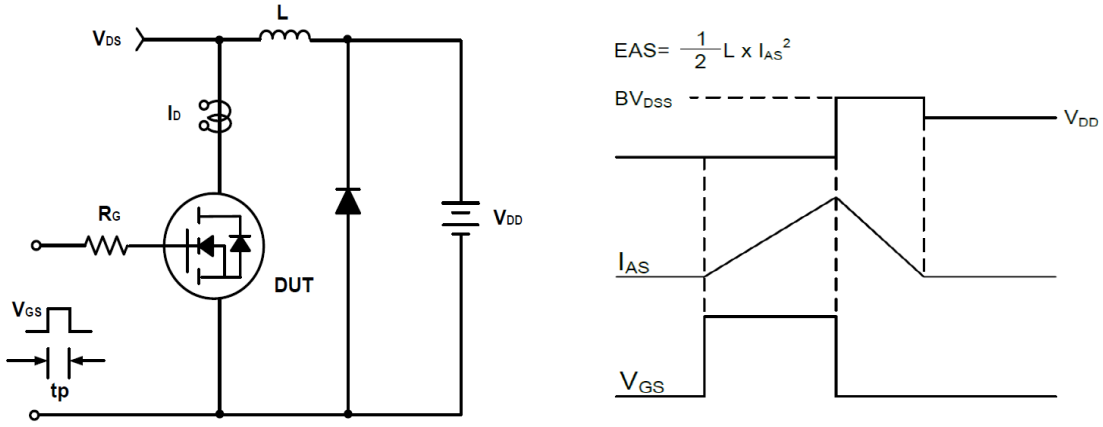

Figure C Unclamped Inductive Switching Circuit & Waveforms

30V/25A N-Channel Advanced Power MOSFET

TO-252 Package Outline Dimensions (Units: mm)

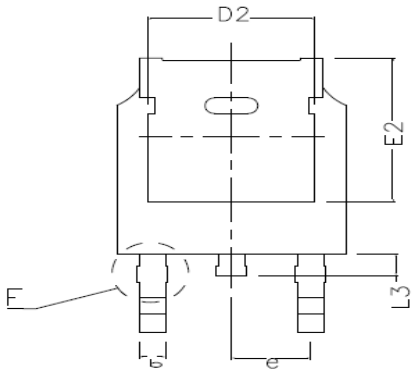

BOTTOM VIEW

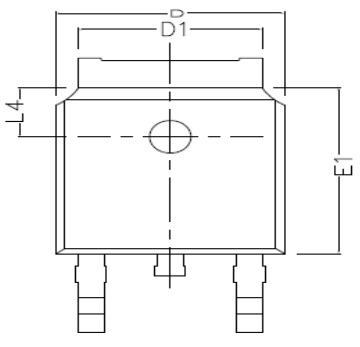

TOP VIEW

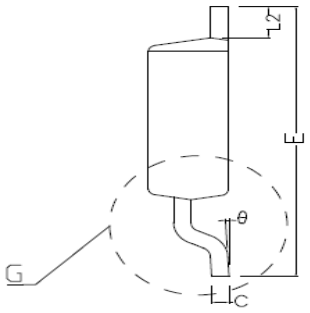

SIDE VIEW

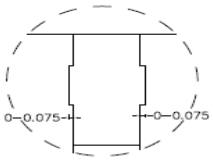

DETAIL F

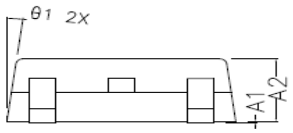

SIDE VIEW

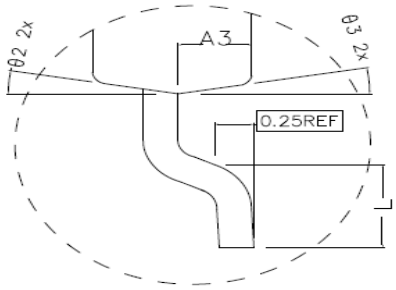

DETAIL G

COMMON DIMENSIONS (UNITS OF MEASURE IS mm)			
	MIN	NORMAL	MAX
A1	0.000	0.100	0.150
A2	2.200	2.300	2.400
A3	1.020	1.070	1.120
b	0.710	0.760	0.810
c	0.460	0.508	0.550
D	6.500	6.600	6.700
D1	5.330REF		
D2	4.830REF		
E	9.900	10.100	10.300
E1	6.000	6.100	6.200
E2	5.600REF		
e	2.286TYPE		
L	1.400	1.550	1.700
L2	1.10REF		
L3	0.80REF		
L4	1.80REF		
θ	0~8°		
θ1	7° TYPE		
θ2	10° TYPE		
θ3	10° TYPE		