SCHOTTKY BARRIER DIODE

APPLICATIONS

- High frequency switch power supply
- Free wheeling diodes, polarity protection applications

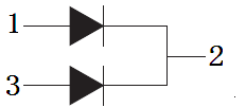

FEATURES

- Common cathode structure
- Low power loss, high efficiency
- High Operating Junction Temperature
- Guard ring for overvoltage protection，High reliability
- RoHS product



TO-220

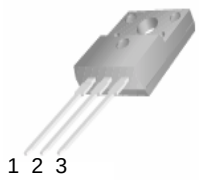

TO-220F

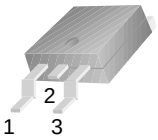

TO-252

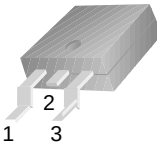

TO-263

ORDER INFORMATION

Product	Package	Pin Assignment			Packing
		1	2	3	
MBR20100CT	TO-220	A	K	A	Tube
MBR20100FCT	TO-220F	A	K	A	Tube
MBR20100YCT	TO-263	A	K	A	Tape Reel
MBR20100DCT	TO-252	A	K	A	Tape Reel

ABSOLUTE RATINGS (Tc=25℃)

Parameter			Symbol	Value	Unit
Repetitive peak reverse voltage			V_{RRM}	100	V
Maximum DC blocking voltage			V_{DC}	100	V
Average forward current	T_C=150℃ (TO-220/263/ TO-252) T_C=125℃ (TO-220F)	per device	$I_{F(AV)}$	20	A
		per diode		10	
Surge non repetitive forward current 8.3 ms single half-sine-wave (JEDEC Method)			I_{FSM}	200	A
Maximum junction temperature			T_j	150	℃
Storage temperature range			T_{STG}	-40~+150	℃

ELECTRICAL CHARACTERISTICS

Parameter	Tests conditions		Value(min)	Value(typ)	Value(max)	Unit
I_R	Tj =25℃	V_R=V_{RRM}			10	μA
V_F	Tj =25℃	I_F=10A		0.82	0.85	V

THERMAL CHARACTERISTICS

Parameter		Symbol	Value(min)	Value(max)	Unit
Thermal resistance from junction to case	TO-220	$R_{th(j-c)}$		2.0	℃/W
	TO-263			2.0	
	TO-252			3.0	
	TO-220F			4.0	

ELECTRICAL CHARACTERISTICS (curves)

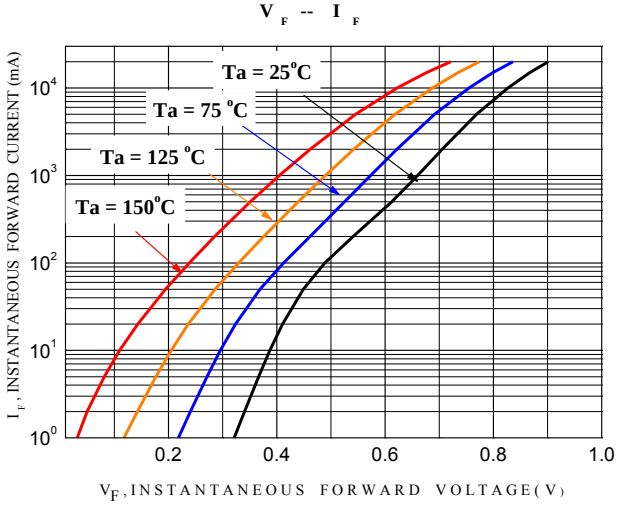

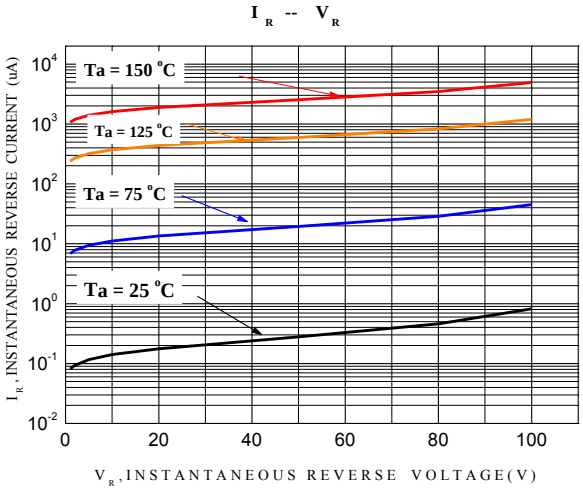

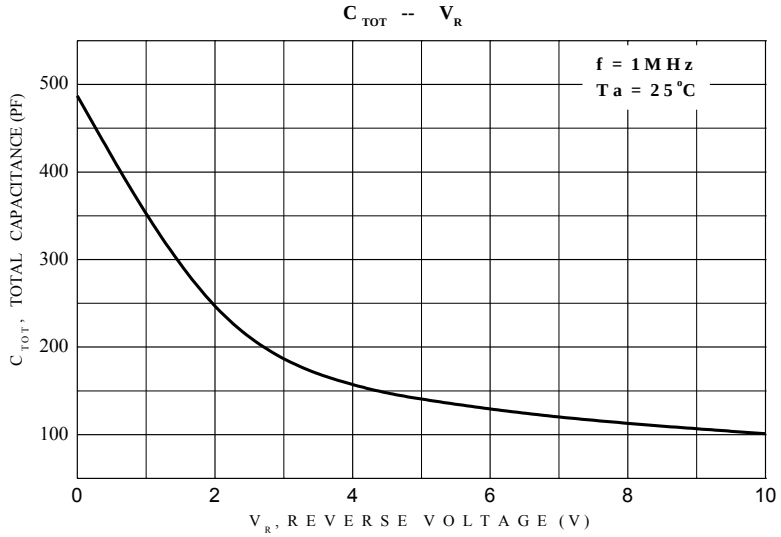

TO-220 Package Outline Dimensions (Units: mm)

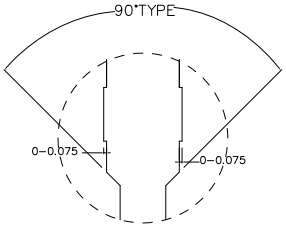

DETAIL A

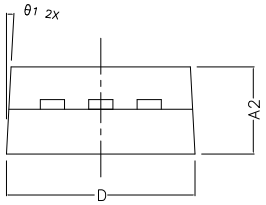

SIDE VIEW

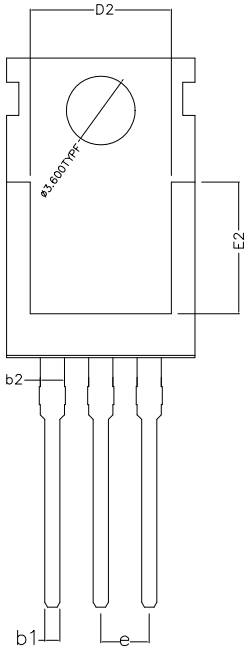

BOTTOM VIEW

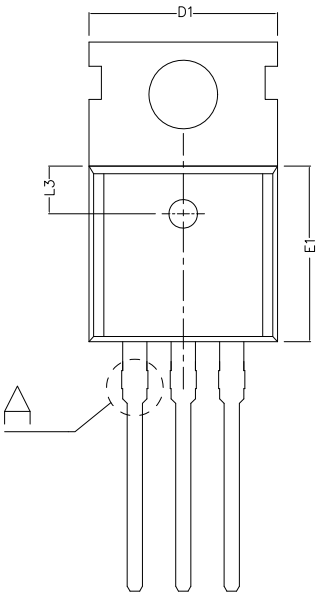

TOP VIEW

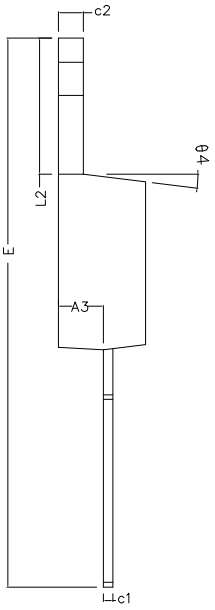

COMMON DIMENSIONS (UNITS OF MEASURE IS mm)			
	MIN	NORMAL	MAX
A2	4.470	4.570	4.670
A3	2.300	2.350	2.400
b1	0.750	0.800	0.850
b2		1.27 TYPE	
c1	0.450	0.500	0.550
c2	1.250	1.300	1.380
D	9.900	10.000	10.100
D1		10.000TYPE	
D2		8.000TYPE	
E	28.660	28.860	29.060
E1	9.000	9.100	9.200
E2		7.000TYPE	
e		2.540TYPE	
L2	6.350	6.500	6.650
L3		2.50TYPE	
θ1		3° TYPE	
θ2		3° TYPE	
θ3		7° TYPE	
θ4		7° TYPE	

TO-220F Package Outline Dimensions(Units: mm)

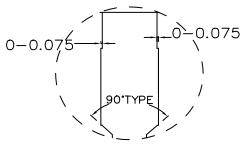

DETAIL F

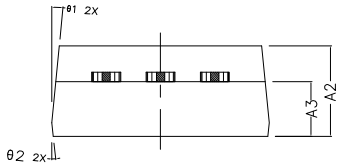

SIDE VIEW

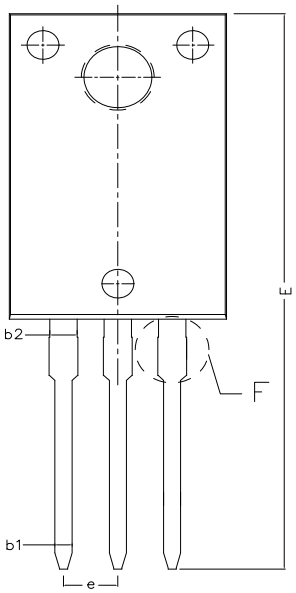

BOTTOM VIEW

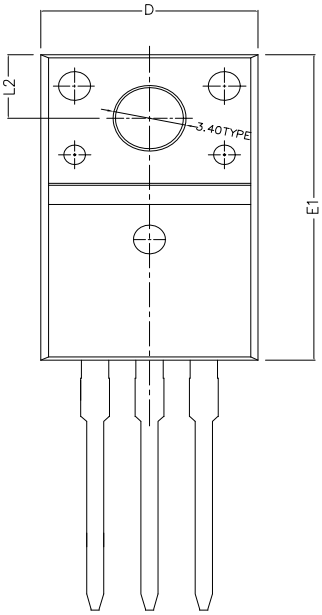

TOP VIEW

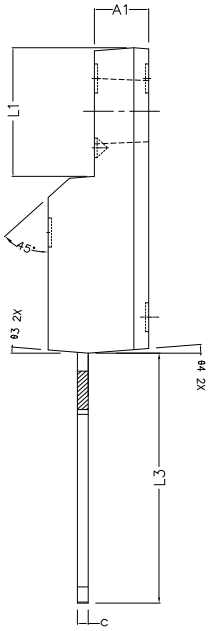

SIDE VIEW

COMMON DIMENSIONS (UNITS OF MEASURE IS mm)			
	MIN	NORMAL	MAX
A1	2.440	2.540	2.640
A2	4.600	4.700	4.800
A3	2.730	2.830	2.930
b1	0.750	0.800	0.850
b2	1.230	1.280	1.330
c	0.450	0.500	0.550
D	10.060	10.160	10.260
E	28.650	28.850	29.050
E1	15.770	15.870	15.970
e	2.54TYPE		
L1	6.68REF		
L2	3.30REF		
L3	12.830	12.980	13.130
θ1	5° TYPE		
θ2	5° TYPE		
θ3	5° TYPE		
θ4	5° TYPE		

TO-220/TO-220F 包装规范

标签、料管、内盒、大箱、海绵

标签：标签 80*50mm

料管：534mm

内盒：577mm*162mm*53mm 土黄色

外箱：594mm*292mm*185mm 土黄色

海绵：560mm*152*14mm

数量

50PCS 产品装 1 条料管、20 条料管装 1 内盒（每 10 条料管两端用橡皮筋扎紧）、5 内盒装 1 大箱（一大箱共 5000pcs）。

TO-220/TO-220F 管装产品包装图解：

包装时使用透明管条，每管50只，管脚朝向大圆孔，管条之间叠放方式如下图，20管一内盒，以最内侧的管脚朝上为基准进行摆放

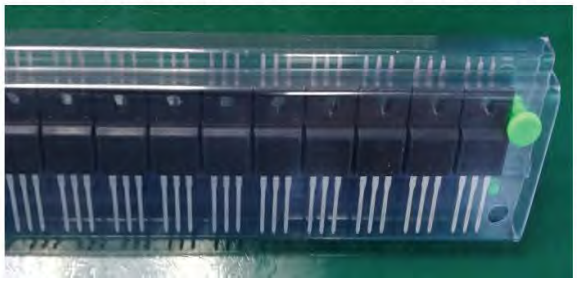



TO-252 Package Outline Dimensions (Units: mm)

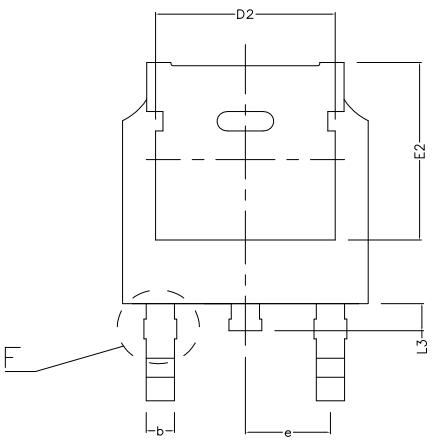

BOTTOM VIEW

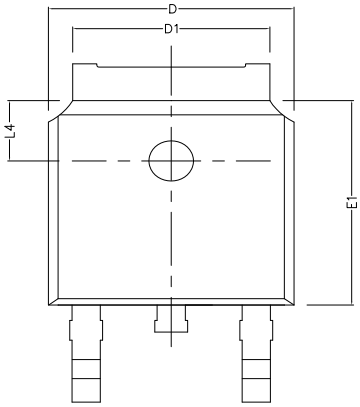

TOP VIEW

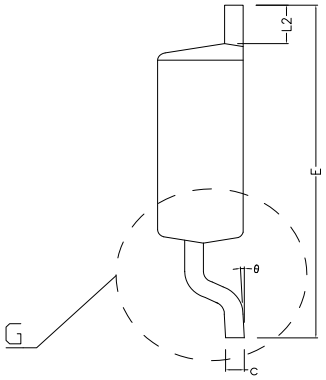

SIDE VIEW

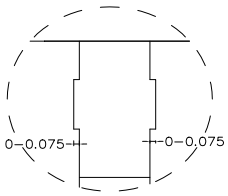

DETAIL F

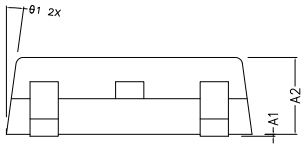

SIDF VIFW

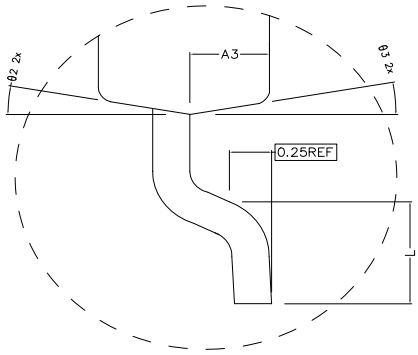

DETAIL G

COMMON DIMENSIONS
(UNITS OF MEASURE IS mm)

	MIN	NORMAL	MAX
A1	0.000	0.100	0.150
A2	2.200	2.300	2.400
A3	1.020	1.070	1.120
b	0.710	0.760	0.810
c	0.460	0.508	0.550
D	6.500	6.600	6.700
D1		5.330REF	
D2		4.830REF	
E	9.900	10.100	10.300
E1	6.000	6.100	6.200
E2		5.600REF	
e		2.286TYPE	
L	1.400	1.550	1.700
L2		1.10REF	
L3		0.80REF	
L4		1.80REF	
θ		0~8°	
θ1		7° TYPE	
θ2		10° TYPE	
θ3		10° TYPE	

TO-252 Embossed Carrier Tape

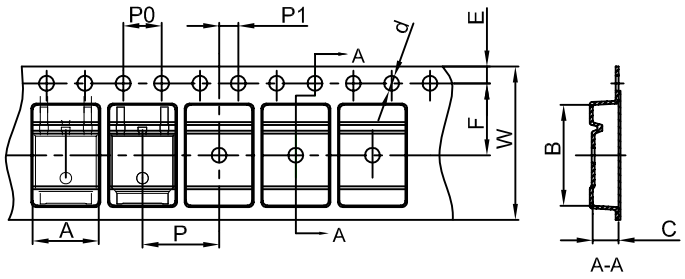

Dimensions are in millimeter										
Pkg type	A	B	C	d	E	F	P0	P	P1	W
TO-252	6.90	10.50	2.70	Ø1.55	1.75	7.50	4.00	8.00	2.00	16.00
(Tolerance)	+/-0.1	+/-0.1	+/-0.1	+/-0.1	+/-0.1	+/-0.1	+/-0.1	+/-0.1	+/-0.1	+0.3/-0.1

TO-252 Tape Leader and Trailer

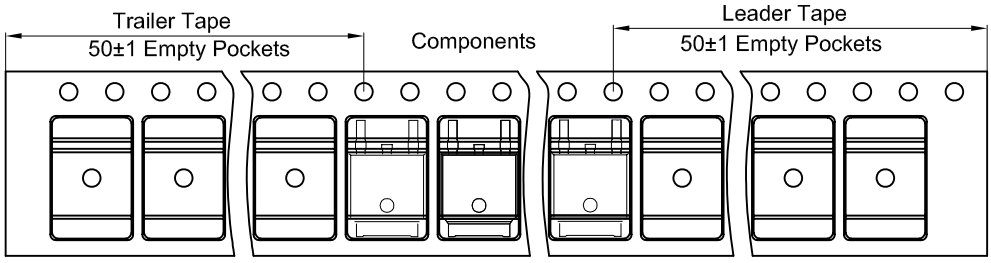

TO-252 Reel

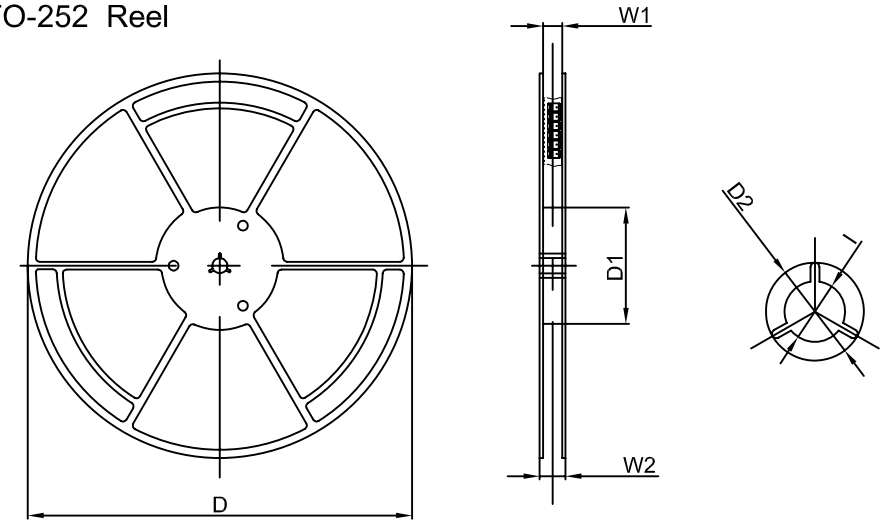

Dimensions are in millimeter						
Reel Option	D	D1	D2	W1	W2	I
13"Dia	330.00	100.00	Ø21.00	16.40	21.00	Ø13.00
Tolerance	+/-2	+/-1	+/-1	+/-1	+/-1	+/-1

REEL	Reel Size	Box	Box Size(mm)	Carton	Carton Size(mm)	G.W.(kg)
2500 pcs	13inch	5000 pcs	357x340x50	50000 pcs	540x370x360	

TO-263 Package Outline Dimensions

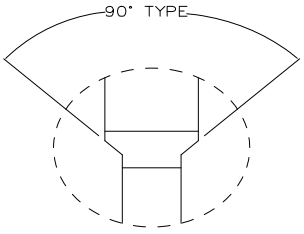

DETAIL F

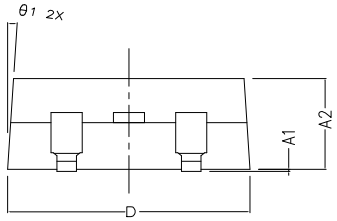

SIDE VIEW

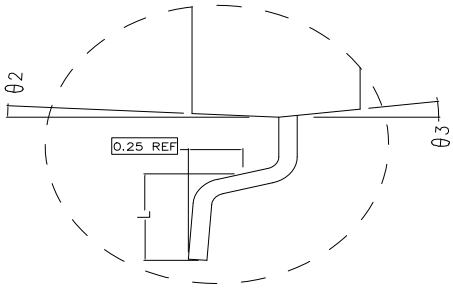

DETAIL G

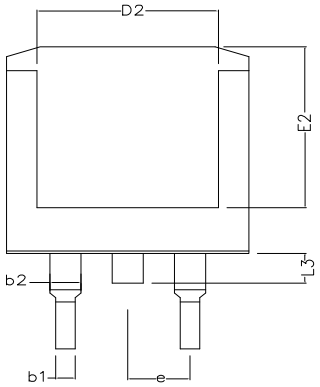

BOTTOM VIEW

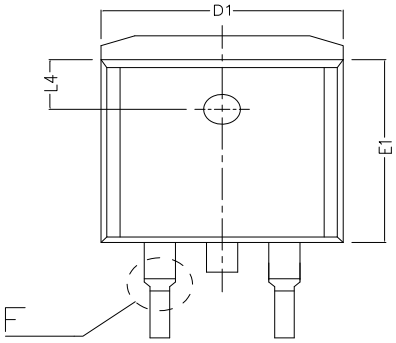

TOP VIEW

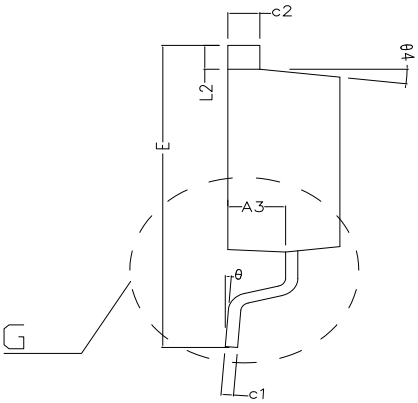

SIDE VIEW

COMMON DIMENSIONS (UNITS OF MEASURE IS mm)			
	MIN	NORMAL	MAX
A1	0.020	0.100	0.200
A2	4.470	4.570	4.670
A3	2.300	2.350	2.400
b1	0.750	0.800	0.850
b2	1.220	1.270	1.320
c1	0.450	0.500	0.550
c2	1.250	1.300	1.350
D	9.900	10.000	10.100
D1		9.880REF	
D2		7.400REF	
E	14.900	15.100	15.300
E1	9.000	9.100	9.200
E2		8.100REF	
e		2.540TYPE	
L	2.100	2.300	2.500
L2	1.100	1.200	1.300
L3	1.300	1.500	1.700
L4		2.50 TYPE	
θ1		3° TYPE	
θ2		3° TYPE	
θ3		7° TYPE	
θ4		7° TYPE	
θ		0 ~ 8°	

TO-263 Embossed Carrier Tape

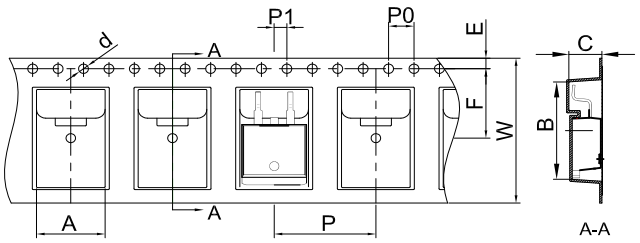

Dimensions are in millimeter										
Pkg type	A	B	C	d	E	F	P0	P	P1	W
TO-263-2L	10.80	16.13	5.21	Ø1.55	1.75	11.50	4.00	16.00	2.00	24.00

TO-263 Tape Leader and Trailer

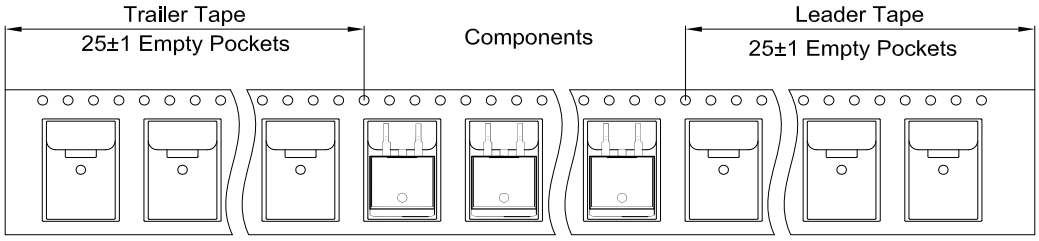

TO-263 Reel

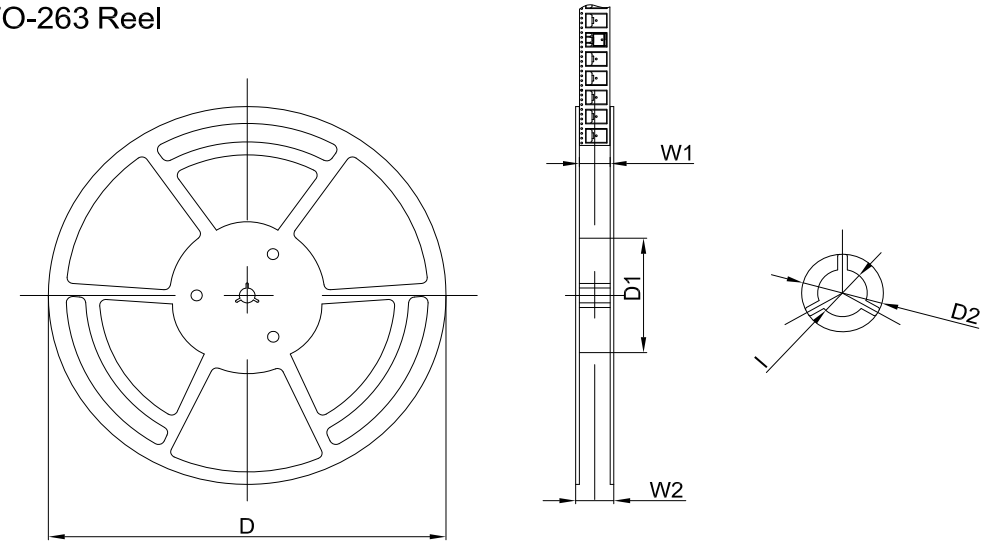

Dimensions are in millimeter						
Reel Option	D	D1	D2	W1	W2	I
13"Dia	Ø330.00	100.00	Ø21.00	24.4	30.4	Ø13.00

REEL	Reel Size	Box	Box Size(mm)	Carton	Carton Size(mm)	G.W.(kg)
800 pcs	13 inch	800 pcs	340x340x50	6400 pcs	420*365*360	

Tube packing information

Package Type	Units/ Tube	Tubes/ Inner Box	Units/ Inner Box	Inner Boxes/ Carton Box	Units/ Carton Box
TO-263	50	10	1000	5	5000