SS22F THRU SS220F

Surface Mount Schottky Barrier Rectifiers Datasheet

Features

- Plastic package Underwirters Laboratory Flammability Classification 94V-0
- For surface mounted applications
- Low profile package
- Built-in strain relief
- Metal to silicon rectifier.majority carrier conduction
- Low power loss,high efficiency
- High surge capacity
- High current capacity,low V_F
- For use in low voltage high frequency inverters,free wheeling and polarity protection applications.
- High temperature soldring guaranteed:260℃/10 seconds at terminals

SMAF

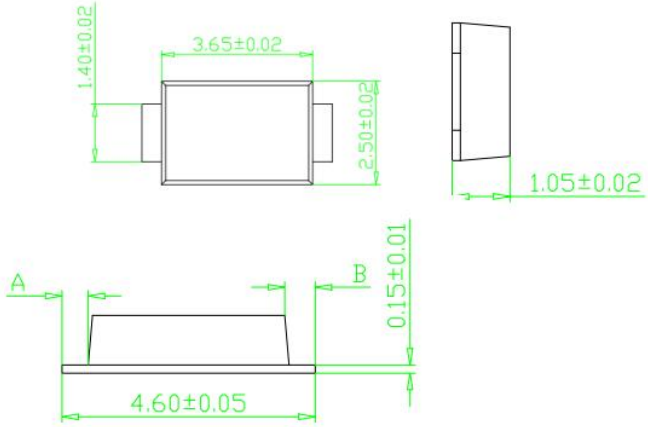

Dimiensions in inches and (milimeters)

Mechanical Data

- Terminal: Plated leads, solderable per MIL-STD-750,Method 2026
- Case: molded plastic SMAF
- Polarity: Color band denotes postives end(cathode)
- Standard packaging:12mm tape(EIA-481)

Maximum Ratings and Electrical Characteristics

Rating at 25℃ ambient temperature unless otherwise specified.
Single Phase, half wave, 60Hz, resistive or inductive

Parameter	Symbols	SS22F	SS24F	SS26F	SS28F	SS210F	SS212F	SS215F	SS220F	Units
Maximum Repetitive Peak Reverse Voltage	V_{RRM}	20	40	60	80	100	120	150	200	V
Maximum RMS voltage	V_{RMS}	14	28	42	56	70	84	105	140	V
Maximum DC Blocking Voltage	V_{DC}	20	40	60	80	100	120	150	200	V
Maximum Average Forward Rectified Current	IF(AV)	2.0								A
Peak Forward Surge Current, 8.3ms Single Half Sine- wave Superimposed On Rated Load (JEDEC method)	I_{FSM}	50				40				A
Maximum Instantaneous Forward Voltage at 2 A	V_F	0.55		0.70		0.85		0.95		V
Maximum Instantaneous Reverse Current TA = 25°C at Rated DC Reverse Voltage TA = 100°C	I_R	0.5 5			0.3 3					mA
Typical Junction Capacitance (1)	Cj	160		80						pF
Typical Thermal Resistance (2)	$R_{\theta JA}$	80								°C/W
Operating Junction Temperature Range	Tj	-55 ~ +150								°C
Storage Temperature Range	Tstg	-55 ~ +150								°C

load. For capacitive load, derate current by 20%.

Note: 1. Pulse Test with PW=300μsec,2% Duty Cycle.

2. Mounted on P.C.Board with 5.0mm2(.013mm thick)copper pad areas.

Schottky rectifier

Fig.1 Forward Current Derating Curve

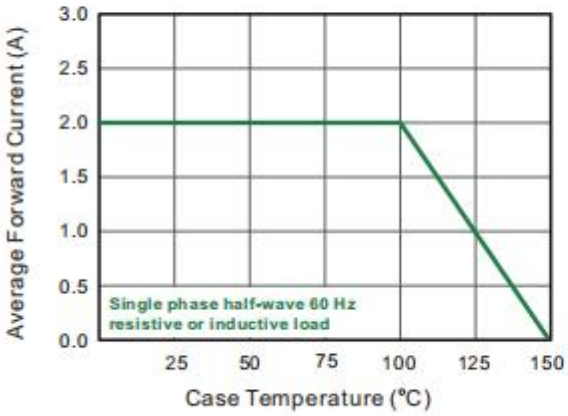

Fig.2 Typical Reverse Characteristics

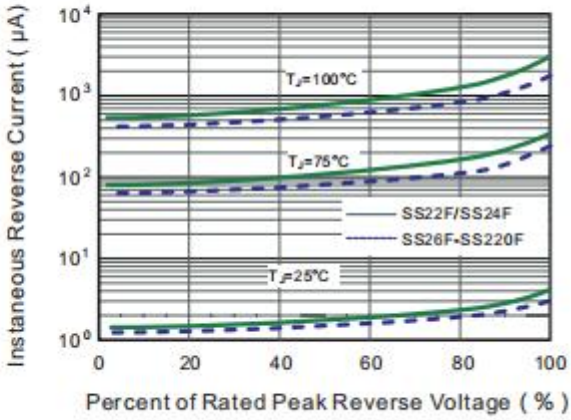

Fig.3 Typical Forward Characteristic

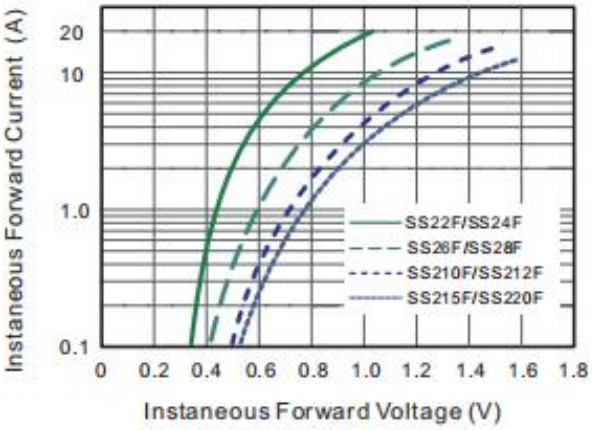

Fig.4 Typical Junction Capacitance

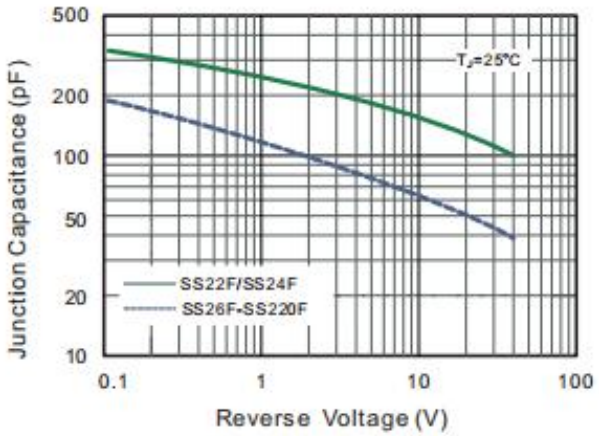

Fig.5 Maximum Non-Repetitive Peak Forward Surage Current

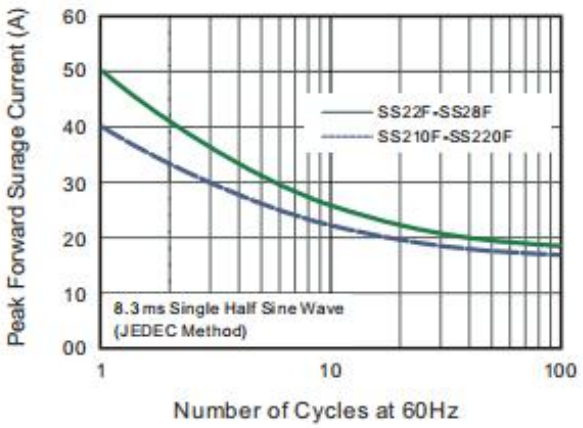

Fig.6- Typical Transient Thermal Impedance

