深圳市佑驰电子有限公司

Specification for Approval

产品名称：一体系列电感

规格型号：HCMA-0412-XXX-M

产品编号：

日　　期：2020-08-15

1、本承认书的内容更改需经过双方确认，任一方单独的修改均视为无效。

2、本承认书在送达客户后，请给予承认并即签回，如无签回下订单的，我司有权以此承认　书标准生产，并表示购买方默认许可。

	审核	制作

批准	申核	检验

REVISION					
REV	DESCRIPTION	DATE	DESIGNED	CHECKED	APPROVED
A0	文件建立	2020/08/15	吕秀秀	Bowen	Darren

深圳市佑驰电子有限公司
Specification for Approval

High Current, Power Inductors
HCMA-0412-XXX-M Power Choke



Description

- Halogen Free
- 125 °C maximum total temperature operation
- Powder iron core material
- Magnetically shielded, low EMI
- High current carrying capacity, Low core losses
- Frequency range up to 5 MHz
- RoHS compliant

Applications

- Voltage Regulator Module (VRM)
- Multi-phase regulators
- Point-of-load modules
- Smart phone POL modules
- SSD modules
- Notebook regulators
- Battery power systems
- Graphics cards
- Data networking and storage systems

Environmental Data

- Storage temperature range: -55 °C to +125 °C
- Operating temperature range: -55 °C to +125 °C (ambient plus self-temperature rise)
- Solder reflow temperature: J-STD-020 compliant

Description		
HCMA-0412-1R0 -M Model	1.0μH Inductance Value	±20 % Inductance Tolerance

Global Part Number										
H	C	M	A	0	4	1	2	1	R	0	M
Product Series				Dimensions				Inductance			ValueTol.

Part Number	Inductance	DC Resistance		HeatingRatingCurrent	Saturation Current
	L0 (μH)	DCR (mΩ)		Idc (A)	Isat (A)
	±20 %, 1MHz, 0. 1V	Typ	Max	Typ	Typ
HCMA-0412-R33-M	0.33	17.0	19.0	5.7	6.8
HCMA-0412-R47-M	0.47	18.3	21.0	5.2	5.4
HCMA-0412-R68-M	0.68	32.0	36.0	4.2	4.8
HCMA-0412-1R0-M	1.0	43.0	47.0	3.8	4.4
HCMA-0412-1R5-M	1.5	68.0	75.0	2.7	3.2
HCMA-0412-2R2-M	2.2	79.4	84.0	2.2	2.4
HCMA-0412-4R7-M	4.7	175.0	190.0	1.4	1.8

Notes

1. All test data is referenced to 25 °C ambient
2. Operating temperature range - 55 °C to + 125 °C
3. Idc(A) :DC current (A) that will cause an approximate ΔT of 40 °C(reference ambient temperature is 25°C)
4. Isat(A) : DC current (A) that will cause L0 to dropapproximately30 %
5. The part temperature (ambient + temp rise) should not exceed 125 °C under worst case operating conditions. Circuit design, component placement, PWB trace size and thickness, airflow and other cooling provisions all affect the part temperature. Part temperature should be verified in the end applicat

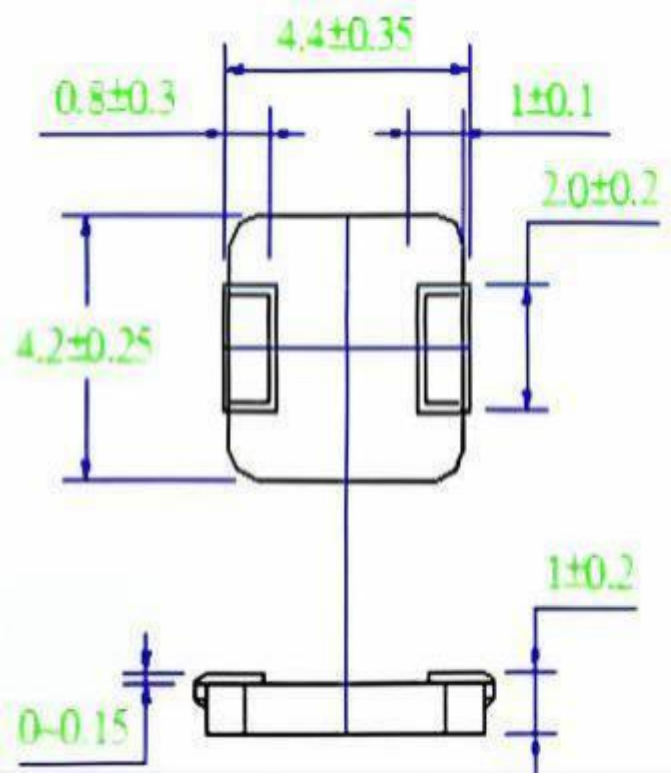

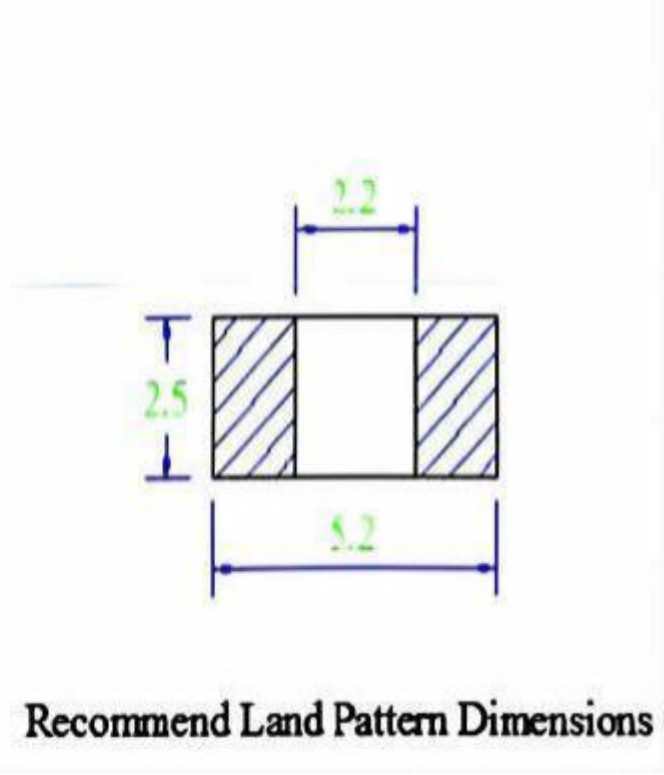

Marking

The inductor is marked with a 3-digit code Example - -1 .0 → 1R0

Note : Using Ink for marking

