MSKSEMI 美森科
SEMICONDUCTOR

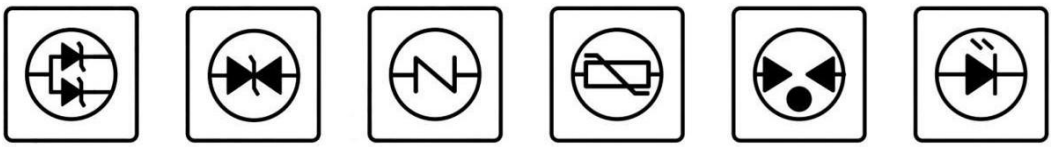

MSZD8028IB5TR

Product specification

GENERAL DESCRIPTION

The MSZD8028IB5TR is a compact 5V Buck Converter which can deliver 1A output current.
MSZD8028IB5TR employs a proprietary control loop to achieve a fast transient load response. It keeps high converting efficiency in both light load and heavy load.
MSZD8028IB5TR is equipped with all kinds of protection, such as input over voltage protection, output short circuit protection, over current protection and over temperature protection.
MSZD8028IB5TR is consists of internal power tree generator, bandgap voltage reference module, under-voltage-lockout (UVLO) module, error amplifier, protection circuitry, driver block, current sensing block and two power MOSFETs.
MSZD8028IB5TR is housed in a SOT23-5 package.

FEATURES

- Input operation range: 2.2– 5.5V
- Input over voltage protection at 6V
- 30uA quiescent current in operation
- Output current up to 1A
- Efficiency up to 95%
- OCP, SCP and OTP protection
- SOT23-5 package

Applications

- Set-top Box
- Solid State Drive
- WIFI and Network Devices
- Security surveillance system
- Toys
- TV
- All other electronic devices

Reference News

Type No	SOT-23-5	MARKING
MSZD8028IB5TR	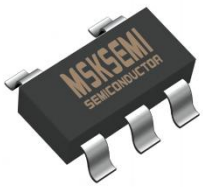	A1**

Typical Application Circuit

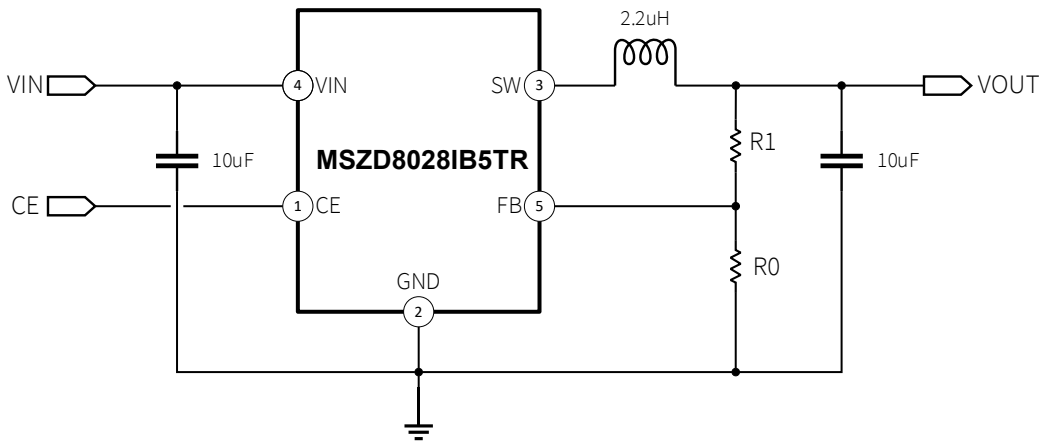

Copyright© Msksemi Incorporated

ORDER INFORMATION

P/N	PKG	QTY
MSZD8028IB5TR	SOT-23-5	3000

Pin Assignment

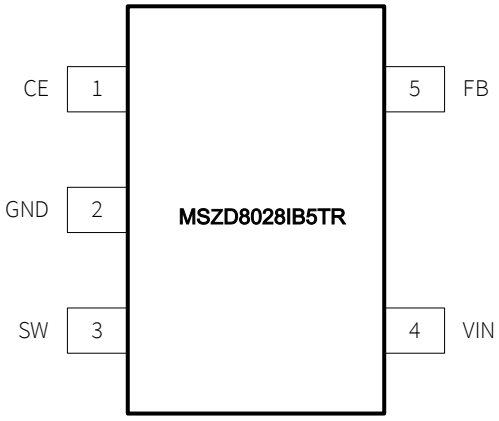

The package of MSZD8028IB5TR is SOT-23-5 , with pin assignment shown in following ta ble:

Pin No	Name	Description
1	CE	Chip enable pin, pull high to turn on the chip
2	GND	Ground
3	SW	The switching node, connecting a 2.2uH inductor to this node
4	VIN	The input power node, connecting a 10uF capacitor to ground.
5	FB	Feedback node, with Vfb at 0.6V

Copyright© Msksemi Incorporated

Absolute Maximum Ratings

V_{IN} (1)……-0.3V to 6V

V_{OUT} (1)……-0.3V to 5.5V

Continuous Power Dissipation (T_A = 25°C) (2)

SOT-23-5 ……0.4W

Junction Temperature……-40°C to 125°C

Lead Temperature……260°C

Storage Temperature……-65°C to +150°C

Thermal Resistance (3)	θ_{JA}	θ_{JC}
SOT-23-5	170°C /W	75°C /W

Notes:

(1) Exceeding these ratings may damage the device.

(2) The maximum allowable power dissipation is a function of the maximum junction temperature $T_J(MAX)$, the junction-to-ambient thermal resistance θ_{JA}, and the ambient temperature T_A. The maximum allowable continuous power dissipation at any ambient temperature is calculated by $P_D(MAX)=(T_J(MAX)-T_A)/\theta_{JA}$. Exceeding the maximum allowable power dissipation will cause excessive die temperature, and the regulator will go into thermal shutdown. Internal thermal shutdown circuitry protects the device from permanent damage.

(3) Measured on JESD51-7, 4-layer PCB.

Electrical Characteristics

All typical values are at Tj=25°C (unless otherwise noted)

PARAMETER	CONDITIONS	MIN	TYP	MAX	UNITS
Input voltage range, V_{IN}		2.2		5.5	V
Input over voltage protection		5.8	6	6.5	V
Quiescent current, I_Q	V_{IN} = 5V	20	30	60	μA
Shutdown current, I_{OFF}	V_{IN} = 5V, V_{CE} = 0		0.1	2	μA
Input voltage UVLO	Rising		2.55	2.65	V
	Falling	2.25	2.37		V
Feedback voltage	V_{IN} = 5V	0.588	0.6	0.612	V
Output current Limit	V_{IN} = 5V, V_{OUT} = 3.3V	1	1.2		A
Line regulation	V_{IN} = 3 to 5V		0.2		%/V
Load regulation	I_{OUT}= 0.1 – 1A		0.1	2	%/A
Switching frequency	V_{IN} = 5V	1	1.5	2	MHz
ON resistance PMOS	V_{IN} = 5V		0.38		Ω
ON resistance NMOS	V_{IN} = 5V		0.25		Ω
CE input threshold ON	V_{IN} = 5V		0.9	1.1	V
CE input threshold OFF	V_{IN} = 5V	0.4	0.7		V
CE input pull down resistor			750		KΩ
Output discharge resistor, R_{pd}	V_{IN} = 5V		600		Ω
Over temperature protection			150		°C
OTP hysteresis			40		°C

Copyright© Msksemi Incorporated

Application Information

Output Voltage Setting

MSZD8028IB5TR 's feedback voltage is set at 0.6V, and it requires a resistor from FB node to ground, named R0, which is suggested to be less than 120K. Assuming the resistor between output node and FVB node is R1, the output voltage of DC-DC converting system is given by

$$Vout = \frac{0.6V}{R0} \times (R1+R0)$$

Capacitor Selection

MSZD8028IB5TR requires one minimal 10uF MLCC capacitor at VIN node and one 10uF MLCC capacitor at VOUT node, however, it is always recommended to have two 10uF MLCC capacitors placed in parallel both at VIN and VOUT node to minimize the noise and withstand the current surge. It is also essential to place both input capacitors and output capacitors as close to MSME3103AM5G's VIN pin and VOUT pin as possible. An PCB layout example is shown at PCB layout recommendation section.

Inductor Selection

MSZD8028IB5TR works at a 1.5MHz oscillating frequency which helps to have a small voltage ripple at output. And 2.2uH inductor is found the most suitable value while meeting requirements on small output voltage ripple as well as a high-power conversion efficiency.

Thermal Considerations

Though MSZD8028IB5TR is a high efficiency DC/DC converter, there will always be some power lost during conversion, most of which becomes heat to make junction temperature higher. PCB design to ensure a good heat dissipation is important. Because the heat dissipation of the SOT-23-5 package is conducted through the pin No. 2, which is GND node of MSZD8028IB5TR, please make sure the ground plate of PCB is big enough to carry away the heat generated in the chip.

PCB Layout

An illustration of PCB layout recommendation with key elements is laid out as following. Please follow this PCB instruction to place the key peripheral devices such as input capacitors, output capacitors and inductor. And star-like connection for ground node is essential. And keeping power loop area as small as possible will improve the EMI performance.

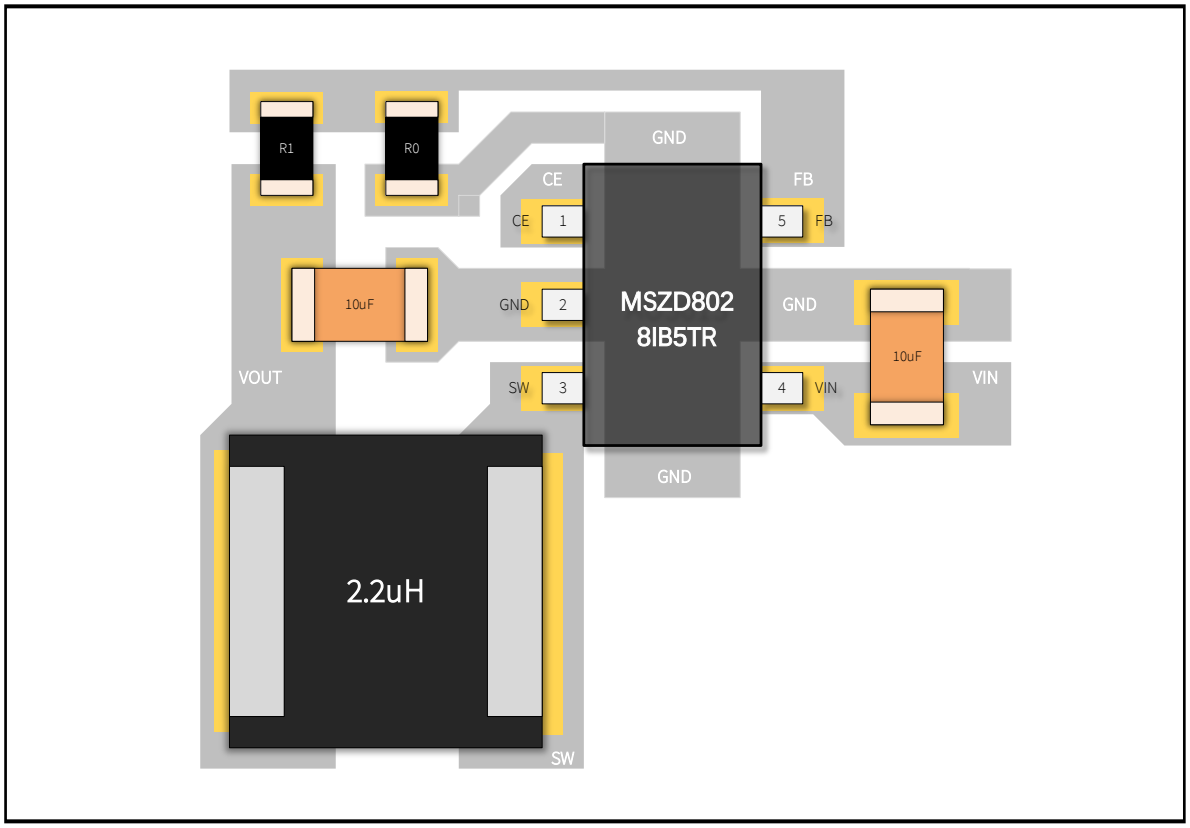

Copyright© Msksemi Incorporated

Block Diagram

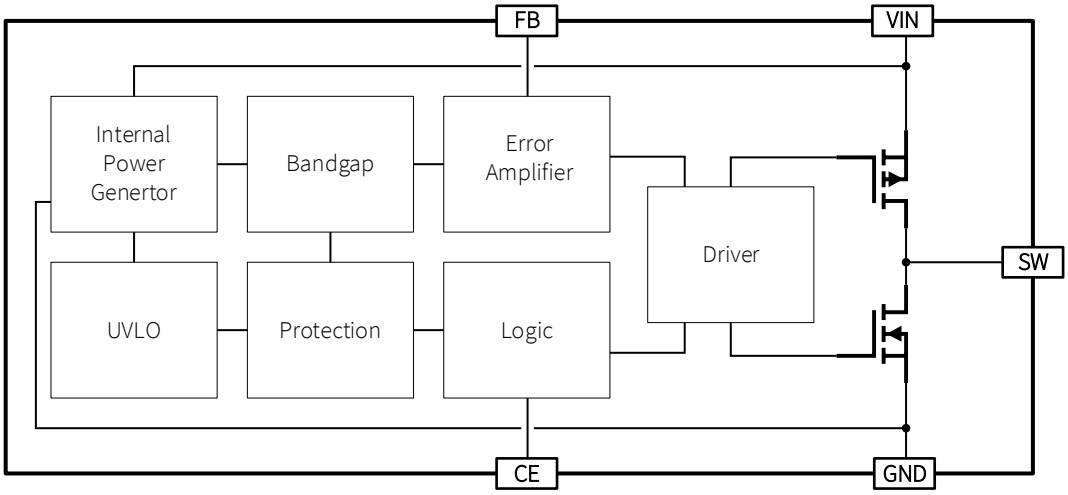

Typical Characteristics

C_{IN}=C_{OUT}=10uF, T_A = 25°C, unless otherwise specified

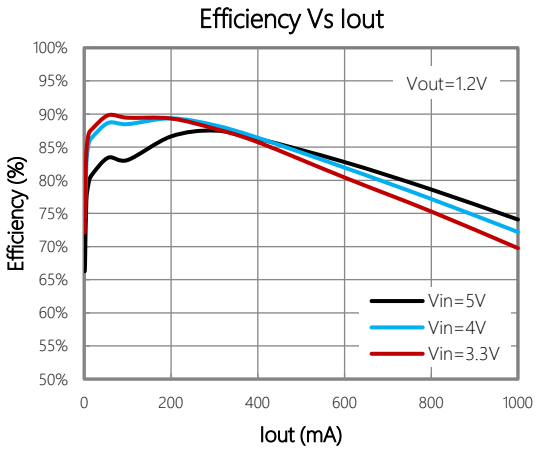

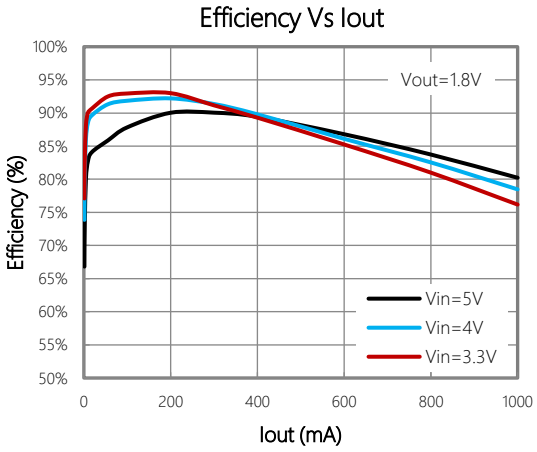

Copyright© Msksemi Incorporated

Typical Characteristics (cont')

C_{IN}=C_{OUT}=10uF, T_A = 25°C, unless otherwise specified

Efficiency Vs Iout

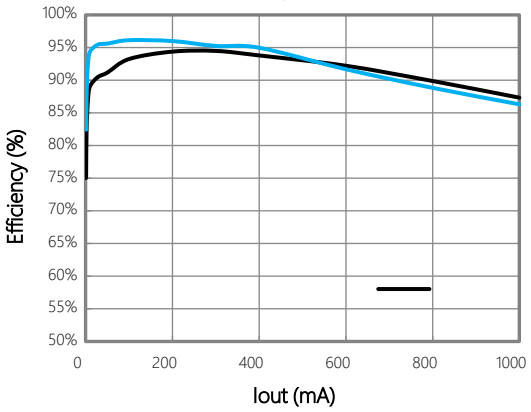

Vout Vs. Iout

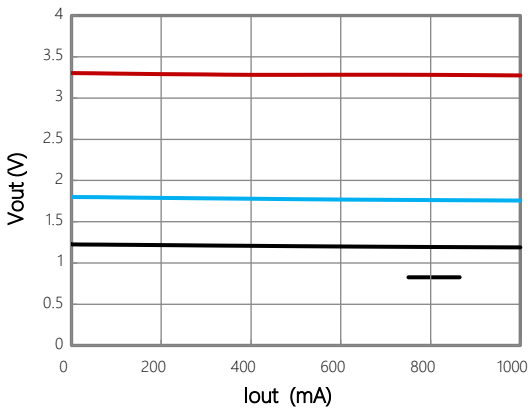

Iq Vs. Vin

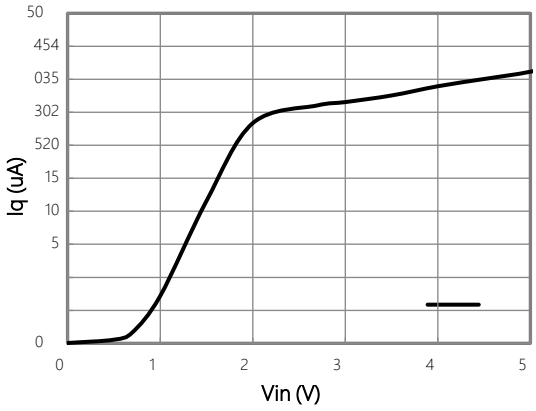

UVLO Vs Vin

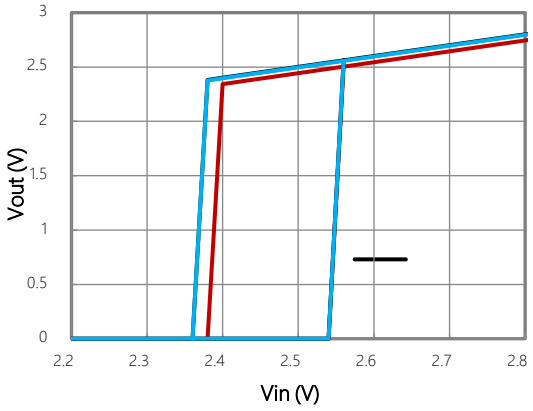

Threshold Vs. Vin

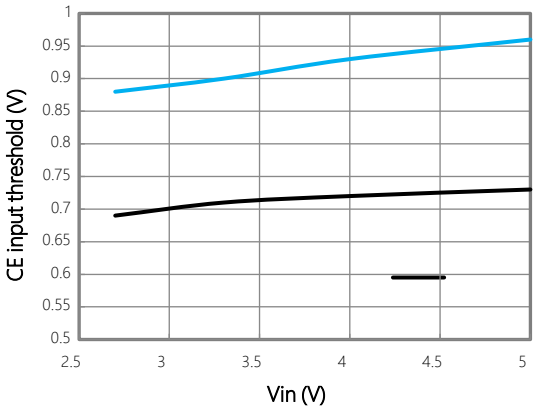

Frequency Vs. Vin

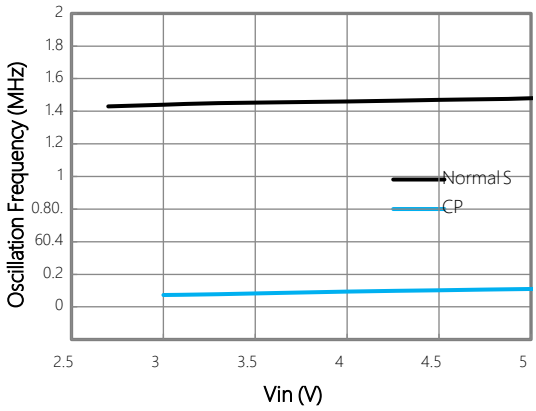

Copyright© Msksemi Incorporated

Package Outline

Package SOT-23-5 Devices per reel

Package dimension (mm):

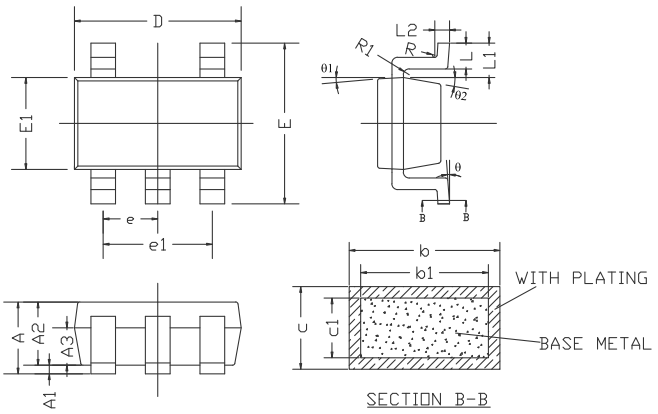

Symbol	MIN	NORM	MAX
A	-	-	1.25
A1	0.00	-	0.15
A2	1.00	1.10	1.20
A3	0.60	0.65	0.70
b	0.36	-	0.50
b1	0.36	0.38	0.45
c	0.14	-	0.20
c1	0.14	0.15	0.16
D	2.826	2.926	3.026
E	2.60	2.80	3.00
E1	1.526	1.626	1.726
e	0.90	0.95	1.00
e1	1.80	1.90	2.00
L	0.35	0.45	0.60
L1	0.59 REF		
L2	0.25 BSC		
R	0.05	-	-
R1	0.05	-	0.20
θ	0°	-	8°
θ1	3°	5°	7°
θ2	6°	-	14°

Copyright© Msksemi Incorporated

Attention

■ Any and all MSKSEMI Semiconductor products described or contained herein do not have specifications that can handle applications that require extremely high levels of reliability, such as life-support systems, aircraft's control systems, or other applications whose failure can be reasonably expected to result in serious physical and/or material damage. Consult with your MSKSEMI Semiconductor representative nearest you before using any MSKSEMI Semiconductor products described or contained herein in such applications.

■ MSKSEMI Semiconductor assumes no responsibility for equipment failures that result from using products at values that exceed, even momentarily, rated values (such as maximum ratings, operating condition ranges, or other parameters) listed in products specificationsof any andall MSKSEMI Semiconductor products described orcontained herein.

■ Specifications of any and all MSKSEMI Semiconductor products described or contained herein stipulate the performance, characteristics, and functions of the described products in the independent state, and are not guarantees of the performance, characteristics, and functions of the described products as mounted in the customer's products or equipment. To verify symptoms and states that cannot be evaluated in an independent device, the customer should always evaluate and test devices mounted in the customer'sproducts orequipment.

■ MSKSEMI Semiconductor. strives to supply high-quality high-reliability products. However, any and all semiconductor products fail with someprobability. It is possiblethat these probabilistic failures could give rise to accidents or events that could endanger human lives, that could give rise to smoke or fire, or that could cause damage to other property. When designing equipment, adopt safety measures so that these kinds of accidents or events cannot occur. Such measures include but are not limited to protective circuits anderror prevention circuitsfor safedesign, redundant design, and structural design.

■ In the event that any or all MSKSEMI Semiconductor products(including technical data, services) described or contained herein are controlled under any of applicable local export control laws and regulations, such products must not be exported without obtaining the export license from theauthorities concerned in accordance with the above law.

■ No part of this publication may be reproduced or transmitted in any form or by any means, electronic or mechanical, including photocopying and recording, or any information storage or retrieval system, or otherwise, without the prior written permission of MSKSEMI Semiconductor.

■ Information (including circuit diagrams and circuit parameters) herein is for example only ; it is not guaranteed for volume production. MSKSEMI Semiconductor believes information herein is accurate and reliable, but no guarantees are made or implied regarding its use or any infringementsof intellectual property rights or other rightsof third parties.

■ Any and all information described or contained herein are subject to change without notice due to product/technology improvement, etc. Whendesigning equipment, referto the "Delivery Specification" for the MSKSEMI Semiconductor productthat you intend to use.

Copyright© Msksemi Incorporated