ROHS	G155

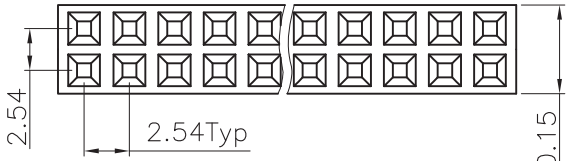

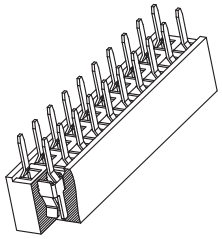

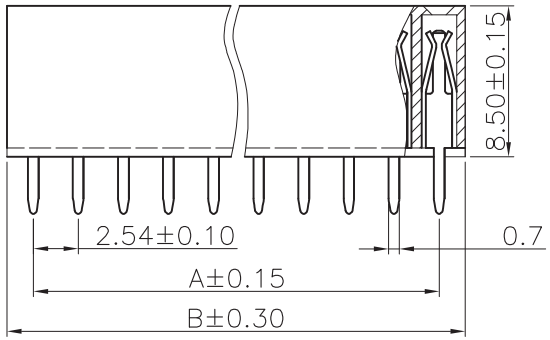

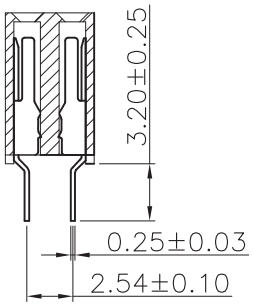

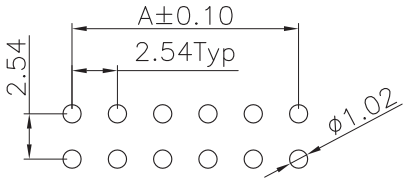

RECOMMENDED PCB LAYOUT
(TOLERANCE:±0.10)

1,ELECTRICAL SPECIFICATIONS:

1.1 Rated current(额定电流):
3A
1.2 Dielectric Withstanding Voltage(耐电压) :
1000V AC for one minute
1.3 Contact Resistance(接触电阻) :
＜20mΩ
1.4 Insulation Resistance(绝缘电阻) :
＞1000MΩ
1.5 Operating Temperature(工作温度) :
−40℃ ~ 105℃
2,MATERIAL SPECIFICATION:
2.1 Insulator Material(绝缘体材质):
High Temperature Plastic ,
UL94V−0
2.2 Contact Material(端子材质):
Brass

PART NO. LEGEND:
FP 6 Q XX S −X 1 U 32−X

- Female Header
- Pitch:6=2.54mm
- Plastic Height: Q=8.50mm
- NO of Contacts: 4 to 80
- Series No: S
- Insulator Material: B:PA6T C:PA9T
- Contact Plating : 1;G/F
- Packing: C;TUBE B:TRAY D:BLISTER BOX

▲ Non−tooled parts
NO.of positions DIM list:

CONTACTS	DIMENSIONS	
	A	B
4	2.54	5.48
6	5.08	8.02
8	7.62	10.56
10	10.16	13.10
12	12.70	15.64
14	15.24	18.18
16	17.78	20.72
18	20.32	23.26
20	22.86	25.80
22	25.40	28.34
24	27.94	30.88
26	30.48	33.42
28	33.02	35.96
30	35.56	38.50
32	38.10	41.04
34	40.64	43.58
36	43.18	46.12
38	45.72	48.66
40	48.26	51.20
42	50.80	53.74
44	53.34	56.28
46	55.88	58.82
48	58.42	61.36
50	60.96	63.90
52	63.50	66.44
54	66.04	68.98
56	68.58	71.52
58	71.12	74.06
60	73.66	76.60
62	76.20	79.14
64	78.74	81.68
66	81.28	84.22
68	83.82	86.76
70	86.36	89.30
72	88.90	91.84
74	91.44	94.38
76	93.98	96.92
78	96.52	99.46
80	99.06	102.00

NO.	DATE	DESCRIPTION	APPROVAL
E			
D			
C			
B			
A			

DRAWING: Hu yatao
CHECKED: Tony
APPROVAL: Yang jie

GENERAL TOLERANCE
.X:=±0.30 .X°:=±2°
.XX:=±0.20 .XX°:=±1°
.XXX:=±0.10 .XXX°:=±0.5°

UNIT: MM
PROJECTION:
SCALE: N/A
SHEET: 1/1

CHIN-BAN
electronics (H.K.) co., ltd

DESCRIPTION:
2.54mm Pitch Female Header Double Row DIP180°

PART NO: FP6QXXS−X1U32−X
REV:1.0
CUSTOMER NO:
SIZE: A4