1. Description

D3V3HN1B2LP-7B(ES) are designed to protect sensitive electronics from damage or latch-up due to ESD. They feature large cross-sectional area junctions for conducting high transient currents. They offer desirable characteristics for board level protection including fast response time, low operating and clamping voltage, and no device degradation.

2. Features

- IEC 61000-4-2 Level 4 ESD Protection
  - ±30kV Contact Discharge
  - ±30kV Air Discharge
- 720W Peak pulse Power (8/20us)
- Low clamping voltage
- Working voltage: 3.6V
- Low leakage current
- RoHS compliant
- Protecting one bi-directional line
- Junction capacitance: 100pF Typ.

3. Applications

- Cellular handsets and accessories
- Portable Digital Assistants
- Notebooks & Handhelds
- Digital Cameras
- Audio lines
- USB Voltage Bus

4. Ordering Information

Part Number	Package	Marking	Material	Packing	Quantity per reel	Flammability Rating	Reel Size
D3V3HN1B2LP -7B(ES)	DFN1006-2L	AB	Halogen free	Tape & Reel	10,000 PCS	UL 94V-0	7 inches

Table-1 Ordering information

Copyright© ElecSuper Incorporated

5. Pin Configuration and Functions

Pin	Name	Description	Outline	Circuit Diagram
1	IO1	Connect to IO		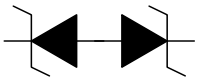
2	IO2	Connect to IO		

Table-2 Pin configuration

6. Specification

6.1. Absolute Maximum rating

Over operating free-air temperature range (unless otherwise noted)

Parameters	Symbol	Min.	Max.	Unit
Peak pulse power (tp=8/20us)@25℃	P_{pk}	-	720	W
Peak pulse current (tp=8/20us)@25℃	I_{PP}		90	A
ESD (IEC61000-4-2 air discharge) @25℃	V_{ESD}	-	±30	kV
ESD (IEC61000-4-2 contact discharge) @25℃	V_{ESD}	-	±30	kV
Junction temperature	T_J	-	150	℃
Operating temperature	T_{OP}	-40	125	℃
Storage temperature	T_{STG}	-55	150	℃
Lead temperature	T_L	-	260	℃

Table-3 Absolute Maximum rating

6.2. Electrical Characteristics

At TA = 25℃ unless otherwise noted

Parameter	Symbol	Conditions	Min.	Typ.	Max.	Units
Reverse Stand-off Voltage	V_{RWM}			3.6		V
Reverse Breakdown Voltage	V_{BR}	IT=1mA	3.8	4.7		V
Reverse Leakage Current	I_R	V_{RWM}=3.6V			100	nA
Clamping Voltage	V_C	I_{PP}=1A; tp=8/20us		3.4		V
Clamping Voltage	V_C	I_{PP}=40A; tp=8/20us		5.0		V
Clamping Voltage	V_C	I_{PP}=90A; tp=8/20us		7.2		V
Junction Capacitance	C_J	V_R=0V; f=1MHz		100		pF

Table-4 Electrical Characteristics

Symbol	Parameters
V_{RWM}	Peak Reverse Working Voltage
I_R	Reverse Leakage Current @ V_{RWM}
V_{TR}	Breakdown Voltage @ I_T
I_T	Test Current
I_{PP}	Maximum Reverse Peak Pulse Current
V_C	Clamping Voltage @ I_{PP}

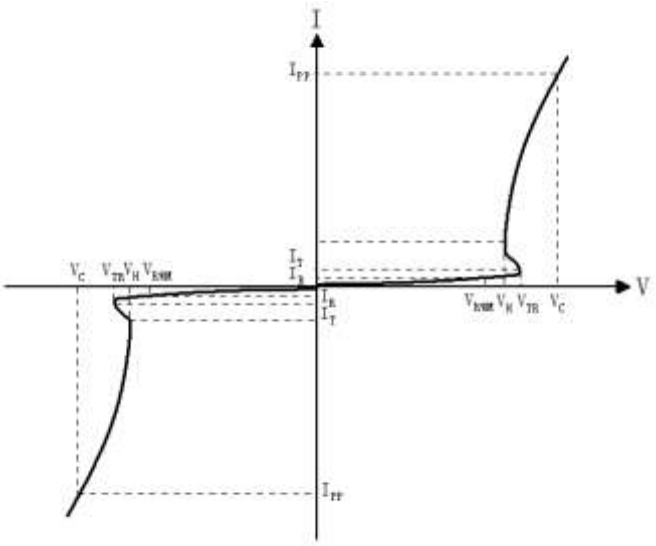

7. Typical Characteristic

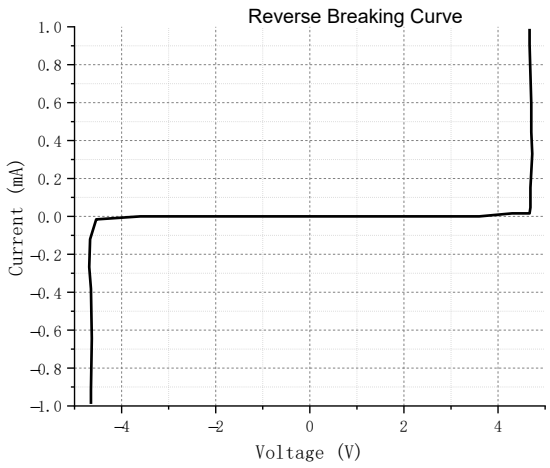

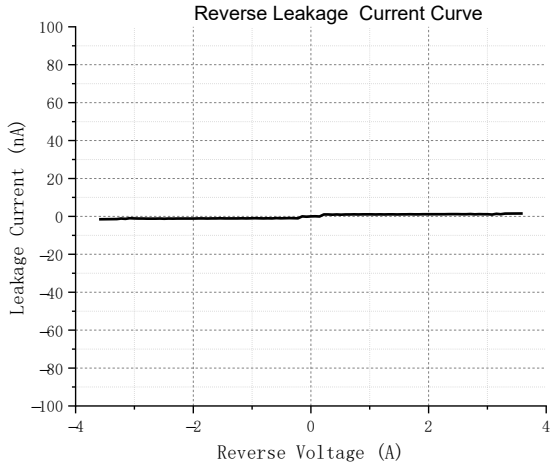

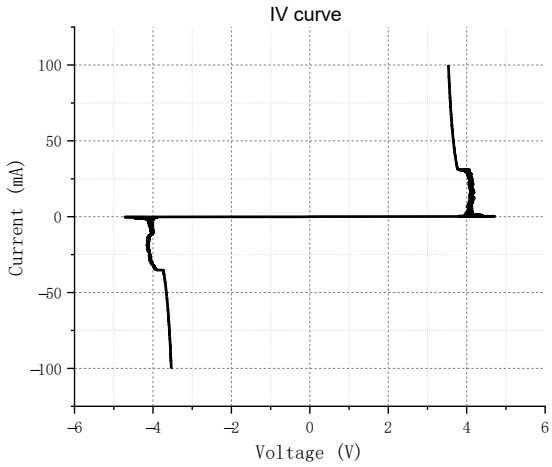

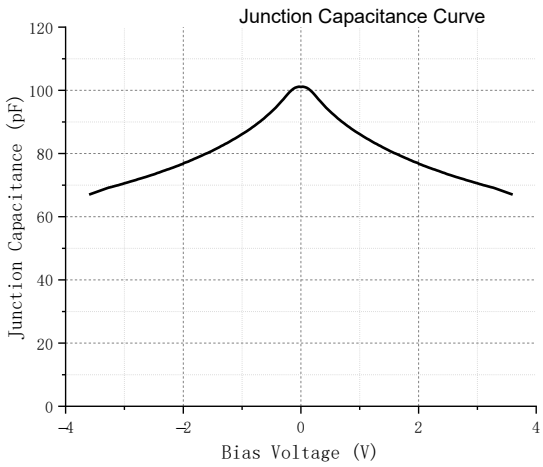

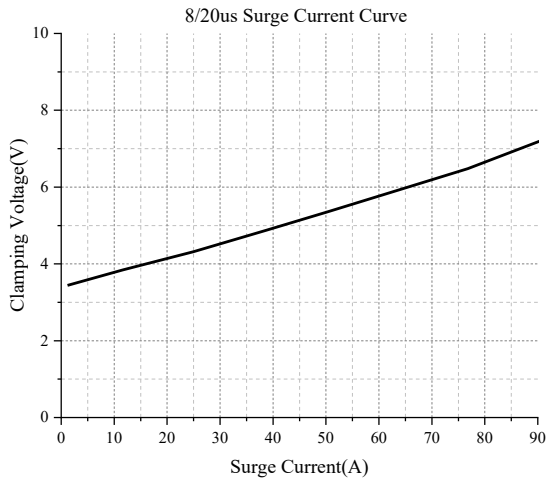

Measurement Wave According to IEC Standard

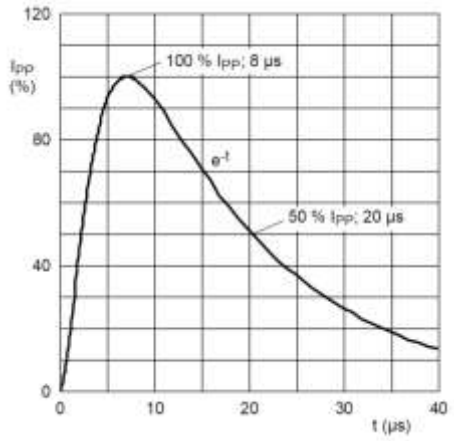	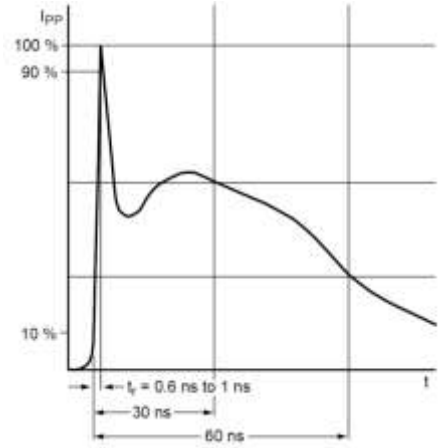
8/20 µs pulse waveform according to IEC 61000-4-5	ESD pulse waveform according to IEC 61000-4-2

8. Dimension (DFN1006-2L)

POD(X)

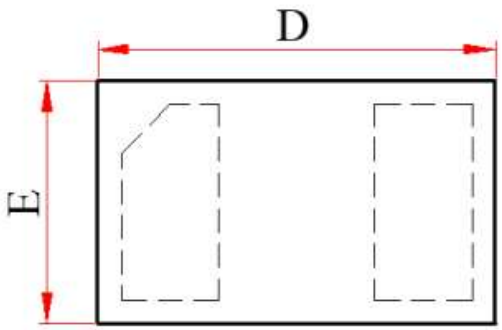

Top View

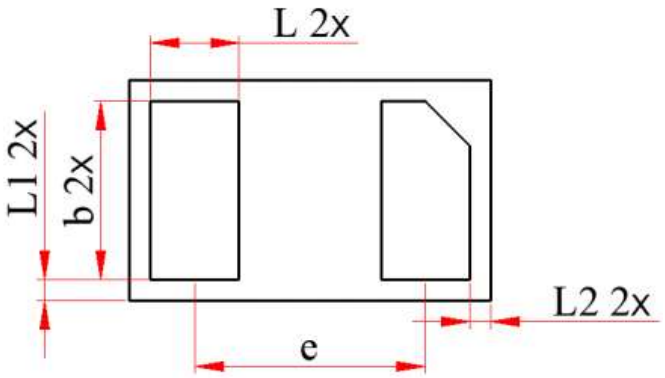

Bottom View

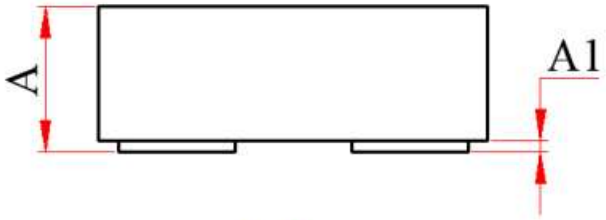

Side View

Symbol	Dimension In Millimeters			Dimension In Inches		
	Normal	Min	Max	Normal	Min	Max
A	--	0.400	0.500	--	0.016	0.020
A1	--	--	0.050	--	--	0.002
D	1.020	0.990	1.050	0.040	0.039	0.041
E	0.620	0.590	0.650	0.024	0.023	0.026
b	0.500	0.450	0.550	0.020	0.018	0.022
L	0.250	0.200	0.300	0.010	0.008	0.012
L1	0.060	0.020	0.100	0.002	0.001	0.004
L2	0.060	0.020	0.100	0.002	0.001	0.004
e	0.650 BSC			0.026 BSC		

9. Recommended Soldering Footprint

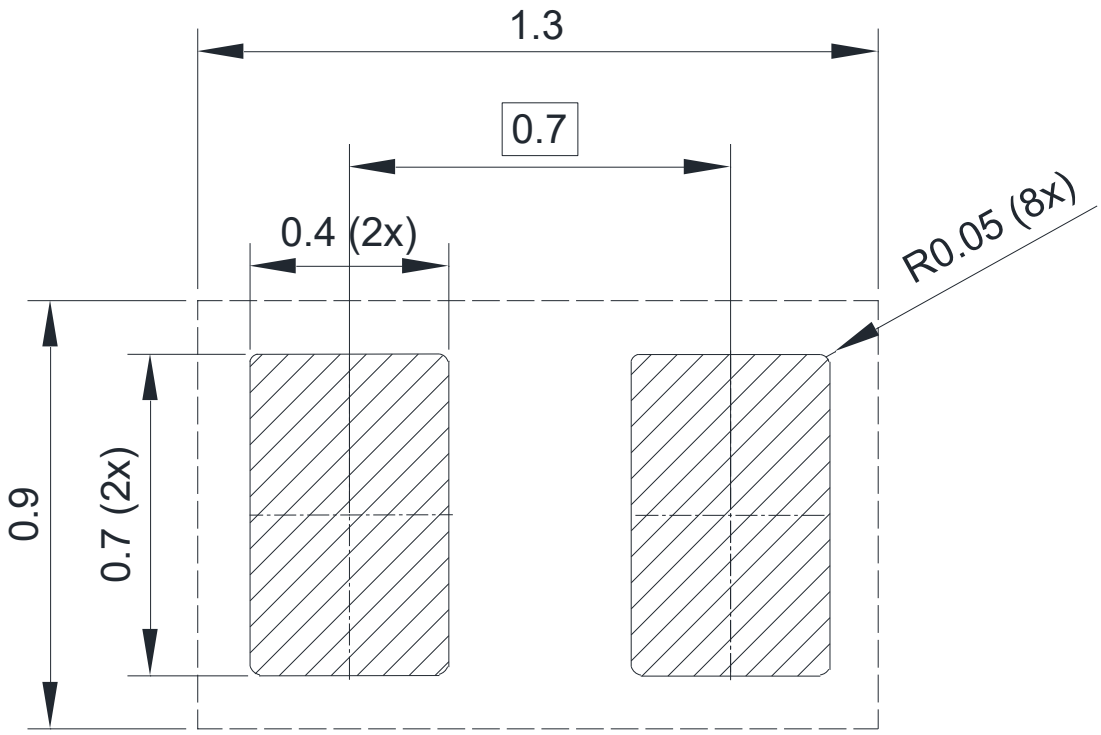

DIMENSIONS: MILLIMETERS

DISCLAIMER

ELECSUPER PROVIDES TECHNICAL AND RELIABILITY DATA (INCLUDING DATASHEETS), DESIGN RESOURCES (INCLUDING REFERENCE DESIGNS), APPLICATION OR OTHER DESIGN ADVICE, SAFETY INFORMATION, AND OTHER RESOURCES “AS IS” AND WITH ALL FAULTS, AND DISCLAIMS ALL WARRANTIES, EXPRESS AND IMPLIED, INCLUDING WITHOUT LIMITATION ANY IMPLIED WARRANTIES OF MERCHANTABILITY, FITNESS FOR A PARTICULAR PURPOSE OR NON-INFRINGEMENT OF THIRD PARTY INTELLECTUAL PROPERTY RIGHTS.

These resources are intended for skilled developers designing with ElecSuper products. You are solely responsible for
(1) selecting the appropriate ElecSuper products for your application;
(2) designing, validating and testing your application;
(3) ensuring your application meets applicable standards, and any other safety, security, or other requirements.
These resources are subject to change without notice. ElecSuper grants you permission to use these resources only for development of an application that uses the ElecSuper products described in the resource. Other reproduction and display of these resources are prohibited. No license is granted to any other ElecSuper intellectual property right or to any third party intellectual property right. ElecSuper disclaims responsibility for, and you will fully indemnify ElecSuper and its representatives against, any claims, damages, costs, losses, and liabilities arising out of your use of these resources. ElecSuper’s products are provided subject to ElecSuper’s Terms of Sale or other applicable terms available either on www.elecsuper.com or provided in conjunction with such ElecSuper products. ElecSuper’s provision of these resources does not expand or otherwise alter ElecSuper’s applicable warranties or warranty disclaimers for ElecSuper products.

Copyright© ElecSuper Incorporated