Description

This single inverter gate is designed for 1.65V to 5.5V VCC operation. The SN74LVC1G04 device performs the Boolean function $Y = \overline{A}$.

The CMOS device has high output drive while maintaining low static power dissipation over a broad VCC operating range.

The SN74LVC1G04 device is available in Green SOT23-5 and SOT-353 packages. It operates over an ambient temperature range of -40°C to +125°C.

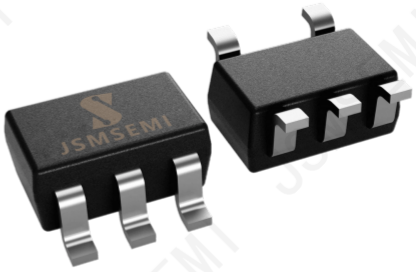



Simplified Schematic

Features

- Packages: SOT23-5, SOT-353(SC70-5)
- Supports 5V V_{CC} operation
- Inputs accept voltages up to 5.5V allowing down translation to V_{CC}
- Typ t_{pd} of 4.2ns at 3.3V
- Low power consumption, 1μA maximum I_{CC}
- ±24mA output drive at 3V
- I_{off} supports live-insertion, partial-power-down mode, and back-drive protection
- ESD protection exceeds JESD 22
  - 2000V human-body model
  - 200V machine model
  - 1000V charged-device model
- Operating Temperature Range: -40°C to +125°C
- RoSH compatible

Applications

- AV receiver
- Audio dock: portable
- Blu-ray player and home theater
- Embedded PC
- MP3 player/recorder (portable audio)
- Personal Digital Assistant (PDA)
- Power: telecom/server AC/DC supply: single controller: analog and digital
- Solid State Drive (SSD): client and enterprise
- TV: LCD/digital and high-definition (HDTV)
- Tablet: enterprise
- Video analytics: server
- Wireless headset, keyboard, and mouse

Ordering Information

Order number	Package	Marking	Operation Temperature Range	MSL Grade	Ship,Quantity	Green
SN74LVC1G04DBVR-JSM	SOT-23-5L	C04F	-40 to 125°C	3	TR&3000	Rohs
SN74LVC1G04DCKR-JSM	SOT-353	CCF	-40 to 125°C	3	TR&3000	Rohs

Pin Configuration and Functions

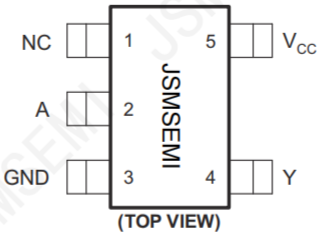

Pin Functions

PIN		DESCRIPTION
NAME	SOT23-5 SOT-353	
NC	1	No connect
A	2	Input
GND	3	Ground
Y	4	Output
V_{CC}	5	Power terminal

Specifications

Absolute Maximum Ratings

over operating free-air temperature range (unless otherwise noted)(1)

			MIN	MAX	UNIT
V_{CC}	Supply voltage range		–0.5	6.5	V
V_I	Input voltage range		–0.5	6.5	V
V_O	Voltage range applied to any output in the high-impedance or power-off state(2)		–0.5	6.5	V
V_O	Voltage range applied to any output in the high or low state(2) (3)		–0.5	V_{CC} + 0.5	V
I_{IK}	Input clamp current	V_I < 0		–50	mA
I_{OK}	Output clamp current	V_O < 0		–50	mA
I_O	Continuous output current			±50	mA
	Continuous current through V_{CC} or GND			±100	mA
T_{stg}	Storage temperature		–65	150	°C

(1) Stresses beyond those listed under Absolute Maximum Ratings may cause permanent damage to the device. These are stress ratings only, and functional operation of the device at these or any other conditions beyond those indicated under Recommended Operating Conditions is not implied. Exposure to absolute-maximum-rated conditions for extended periods may affect device reliability.
(2) The input and output negative-voltage ratings may be exceeded if the input and output current ratings are observed.
(3) The value of V_{CC} is provided in the Recommended Operating Conditions table.

ESD Ratings

			VALUE	UNIT
$V_{(ESD)}$	Electrostatic discharge	Human body model (HBM)	±2000	V
		Charged device model (CDM)	±1000	

Recommended Operating Conditions

(1)			MIN	MAX	UNIT
V_{CC}	Supply voltage	Operating	1.65	5.5	V
		Data retention only	1.5		
V_{IH}	High-level input voltage	V_{CC} = 1.65V to 1.95V	0.65 × V_{CC}		V
		V_{CC} = 2.3V to 2.7V	1.7		
		V_{CC} = 3V to 3.6V	2		
		V_{CC} = 4.5V to 5.5V	0.7 × V_{CC}		
V_{IL}	Low-level input voltage	V_{CC} = 1.65V to 1.95V		0.35 × V_{CC}	V
		V_{CC} = 2.3V to 2.7V		0.7	
		V_{CC} = 3V to 3.6V		0.8	
		V_{CC} = 4.5V to 5.5V		0.3 × V_{CC}	
V_I	Input voltage		0	5.5	V
V_O	Output voltage		0	V_{CC}	V
I_{OH}	High-level output current	V_{CC} = 1.65V		–4	mA
		V_{CC} = 2.3V		–8	
		V_{CC} = 3V		–16	
				–24	
		V_{CC} = 4.5V		–32	
I_{OL}	Low-level output current	V_{CC} = 1.65V		4	mA
		V_{CC} = 2.3V		8	
		V_{CC} = 3V		16	
				24	
		V_{CC} = 4.5V		32	
Δt/Δv	Input transition rise or fall rate	V_{CC} = 1.8V ± 0.15V, 2.5V ± 0.2V		20	ns/V
		V_{CC} = 3.3V ± 0.3V		10	
		V_{CC} = 5V ± 0.5V		5	
T_A	Operating free-air temperature		–40	125	°C

(1) All unused inputs of the device must be held at V_{CC} or GND to ensure proper device operation.

Thermal Information

THERMAL METRIC		SN74LVC1G04		UNIT
		SOT23	SC70	
		5 PINS	5 PINS	
$R_{\theta JA}$	Junction-to-ambient thermal resistance	357.1	371.0	°C/W
$R_{\theta JCtop}$	Junction-to-case (top) thermal resistance	263.7	297.5	
$R_{\theta JB}$	Junction-to-board thermal resistance	264.4	258.6	
ψ_{JT}	Junction-to-top characterization parameter	195.6	195.6	
ψ_{JB}	Junction-to-board characterization parameter	262.2	256.2	
$R_{\theta JCbot}$	Junction-to-case (bottom) thermal resistance	–	–	

Electrical Characteristics—DC Limit Changes

over recommended operating free-air temperature range (Full=-40°C to +125°C, typical values are at T_A = +25°C, unless otherwise noted.) (1)

PARAMETER		TEST CONDITIONS	V_{CC}	TEMP	MIN(2)	TYP(3)	MAX(2)	UNIT
V_{OH}		I_{OH} = -100μA	1.65V to 5.5V	Full	V_{CC}-0.1			V
		I_{OH} = -4mA	1.65V		1.2			
		I_{OH} = -8mA	2.3V		1.9			
		I_{OH} = -16mA	3V		2.4			
		I_{OH} =- 24mA			2.3			
		I_{OH} = -32mA	4.5V		3.8			
V_{OL}		I_{OL} = 100μA	1.65V to 5.5V	Full			0.1	V
		I_{OL} = 4mA	1.65V				0.45	
		I_{OL} = 8mA	2.3V				0.3	
		I_{OL} = 16mA	3V				0.4	
		I_{OL} = 24mA					0.55	
		I_{OL} = 32mA	4.5V				0.55	
I_I	A input	V_I=5.5V or GND	0V to 5.5V	+25°C		±0.1	±1	μA
				Full			±5	
I_{off}		V_I or V_O=5.5V	0	+25°C		±0.1	±1	μA
				Full			±10	
I_{CC}		V_I=5.5V or GND, I_O=0	1.65V to 5.5V	+25°C		0.1	1	μA
				Full			10	
ΔI_{CC}		One input at V_{CC}-0.6V, Other inputs at V_{CC} or GND	3V to 5.5V	Full			500	μA
Input Capacitance (C_i)		V_I=V_{CC} or GND	3.3V	+25°C		4		pF

(1) All unused inputs of the device must be held at V_{CC} or GND to ensure proper device operation.
(2) Limits are 100% production tested at 25°C. Limits over the operating temperature range are ensured through correlations using statistical quality control (SQC) method.
(3) Typical values represent the most likely parametric norm as determined at the time of characterization. Actual typical values may vary over time and will also depend on the application and configuration.

Electrical Characteristics—AC Limit Changes

PARAMETER	SYMBOL	TEST CONDITIONS		MIN(2)	TYP(3)	MAX(2)	UNIT
Propagation Delay	t_{pd}	V_{CC}=1.8V±0.15V	C_L=30pF, R_L=1KΩ		13.0		ns
		V_{CC}=2.5V±0.2V	C_L=30pF, R_L=500Ω		5.1		
		V_{CC}=3.3V±0.3V	C_L=50pF, R_L=500Ω		4.2		
		V_{CC}=5V±0.5V	C_L=50pF, R_L=500Ω		3.3		
Power dissipation capacitance	C_{pd}	V_{CC}=1.8V	f=10MHz		16		pF
		V_{CC}=2.5V			18		
		V_{CC}=3.3V			18		
		V_{CC}=5V			20		

(1) All unused inputs of the device must be held at V_{CC} or GND to ensure proper device operation.
(2) This parameter is ensured by design and/or characterization and is not tested in production.
(3) Typical values represent the most likely parametric norm as determined at the time of characterization. Actual typical values may vary over time and will also depend on the application and configuration.

Parameter Measurement Information

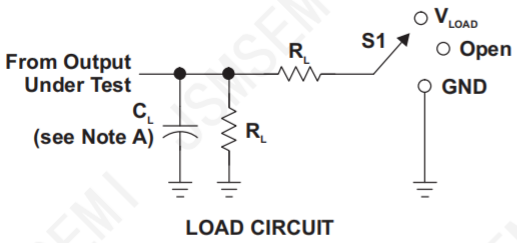

LOAD CIRCUIT

TEST	S1
t_{PLH}/t_{PHL}	Open
t_{PLZ}/t_{PZL}	V_{LOAD}
t_{PHZ}/t_{PZH}	GND

V_{CC}	INPUTS		V_M	V_{LOAD}	C_L		R_L		V_Δ
	V_I	t_r/t_f							
1.8V±0.15V	V_{CC}	≤2ns	$V_{CC}/2$	2 x V_{CC}	15pF	30pF	1MΩ	1kΩ	0.15V
2.5V±0.2V	V_{CC}	≤2ns	$V_{CC}/2$	2 x V_{CC}	15pF	30pF	1MΩ	500Ω	0.15V
3.3V±0.3V	3V	≤2.5ns	1.5V	6V	15pF	50pF	1MΩ	500Ω	0.3V
5V±0.5V	V_{CC}	≤2.5ns	$V_{CC}/2$	2 x V_{CC}	15pF	50pF	1MΩ	500Ω	0.3V

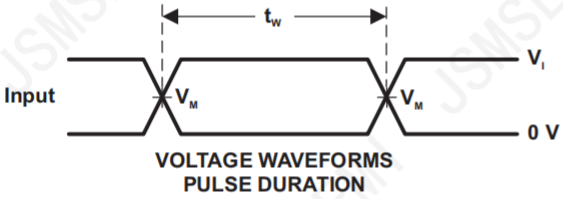

VOLTAGE WAVEFORMS
PULSE DURATION

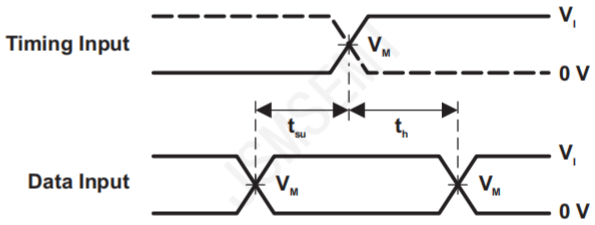

VOLTAGE WAVEFORMS
SETUP AND HOLD TIMES

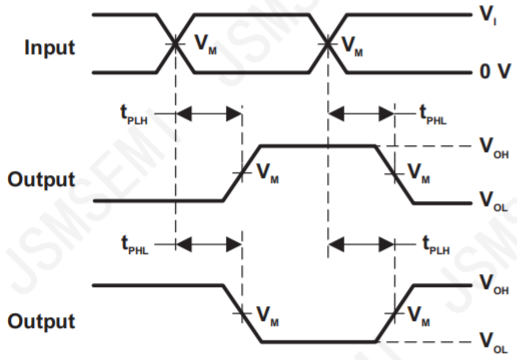

VOLTAGE WAVEFORMS
PROPAGATION DELAY TIMES
INVERTING AND NONINVERTING OUTPUTS

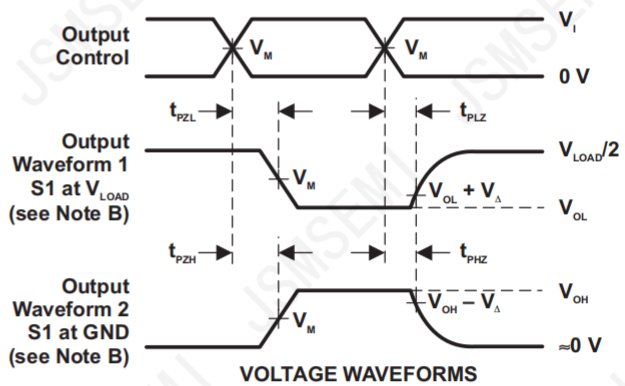

VOLTAGE WAVEFORMS
ENABLE AND DISABLE TIMES
LOW- AND HIGH-LEVEL ENABLING

NOTES:
A. C_L includes probe and jig capacitance.
B. Waveform 1 is for an output with internal conditions such that the output is low, except when disabled by the output control. Waveform 2 is for an output with internal conditions such that the output is high, except when disabled by the output control.
C. All input pulses are supplied by generators having the following characteristics: PRR ≤ 10 MHz, Z_O = 50 Ω.
D. The outputs are measured one at a time, with one transition per measurement.
E. t_{PLZ} and t_{PHZ} are the same as t_{dis}.
F. t_{PZL} and t_{PZH} are the same as t_{en}.
G. t_{PLH} and t_{PHL} are the same as t_{pd}.
H. All parameters and waveforms are not applicable to all devices.

Figure 1. Load Circuit and Voltage Waveforms

Detailed Description

Overview

The SN74LVC1G04 device contains inverter gate and performs the Boolean function Y = $\overline{A}$. This device is fully specified for partial-power-down applications using I_{off}. The I_{off} circuitry disables the outputs, preventing damaging current backflow through the device when it is powered down.

Functional Block Diagram

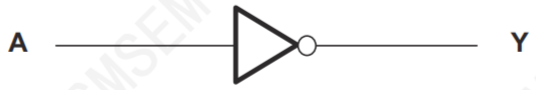

Feature Description

- Wide operating voltage range.
  - Operates from 1.65V to 5.5V.
- Allows down voltage translation.
- Inputs accept voltages to 5.5V.
- I_{off} feature allows voltages on the inputs and outputs, when V_{CC} is 0V.

Device Functional Modes

Function Table

INPUT	OUTPUT
A	Y
H	L
L	H

Application Information

The SN74LVC1G04 is a high drive CMOS device that can be used for implementing inversion logic with a high output drive, such as an LED application. It can produce 24mA of drive current at 3.3V making it Ideal for driving multiple outputs and good for high speed applications up to 100Mhz. The inputs are 5.5V tolerant allowing it to translate down to V_{CC}.

Typical Application

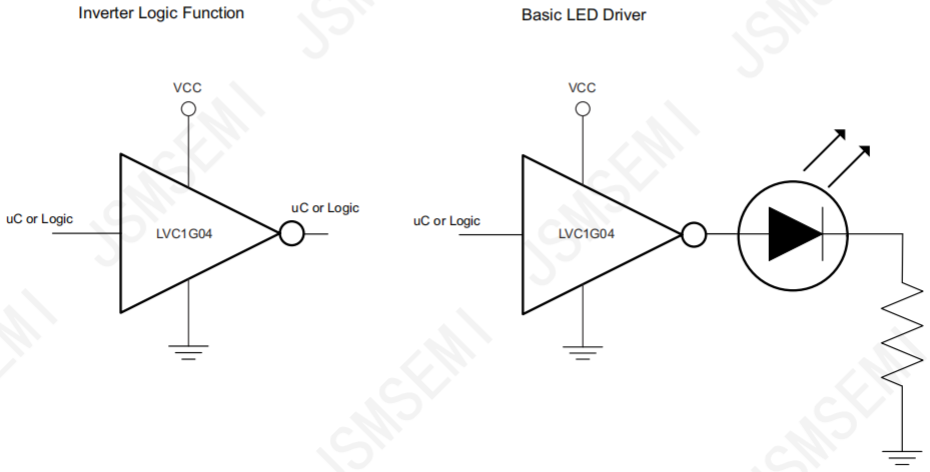

Power Supply Recommendations

The power supply can be any voltage between the min and max supply voltage rating located in the Recommended Operating Conditions table.

Each VCC pin should have a good bypass capacitor to prevent power disturbance. For devices with a single supply, a 0.1μF capacitor is recommended. if there are multiple VCC pins, then a 0.01μF or 0.022μF capacitor is recommended for each power pin. It is ok to parallel multiple bypass capacitors to reject different frequencies of noise. 0.1μF and 1μF capacitors are commonly used in parallel. The bypass capacitor should be installed as close to the power pin as possible for best results.

Layout

Layout Guidelines

When using multiple bit logic devices, inputs should never float.

In many cases, functions or parts of functions of digital logic devices are unused; for example, when only two inputs of a triple-input AND gate are used or only 3 of the 4 buffer gates are used. Such input pins should not be left unconnected because the undefined voltages at the outside connections result in undefined operational states. The rules that must be observed under all circumstances are specified in the next paragraph.

All unused inputs of digital logic devices must be connected to a high or low bias to prevent them from floating. The logic level that should be applied to any particular unused input depends on the function of the device. Generally they will be tied to GND or VCC; whichever makes more sense or is more convenient.

Layout Example

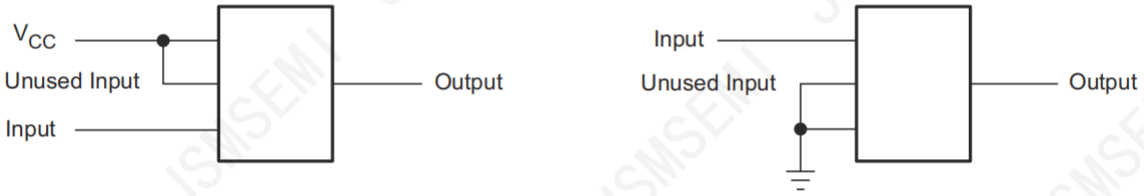

Package Information

SOT-23-5L

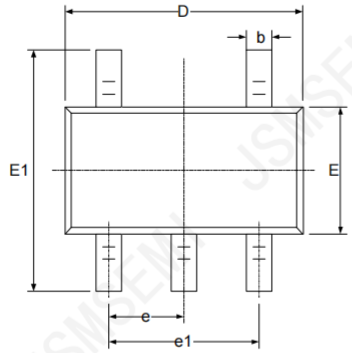

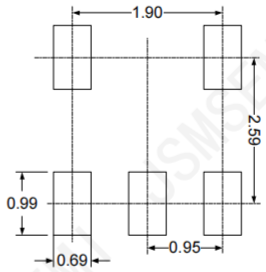

RECOMMENDED LAND PATTERN (Unit: mm)

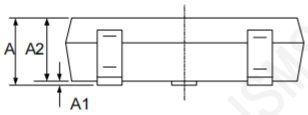

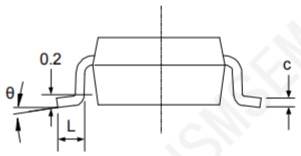

Symbol	Dimensions In Millimeters		Dimensions In Inches	
	Min	Max	Min	Max
A	1.050	1.250	0.041	0.049
A1	0.000	0.100	0.000	0.004
A2	1.050	1.150	0.041	0.045
b	0.300	0.500	0.012	0.020
c	0.100	0.200	0.004	0.008
D	2.820	3.020	0.111	0.119
E	1.500	1.700	0.059	0.067
E1	2.650	2.950	0.104	0.116
e	0.950(BSC)		0.037(BSC)	
e1	1.800	2.000	0.071	0.079
L	0.300	0.600	0.012	0.024
θ	0°	8°	0°	8°

Package Information

SOT-353(SC70-5)

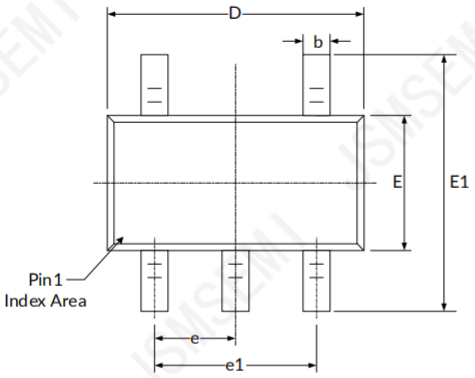

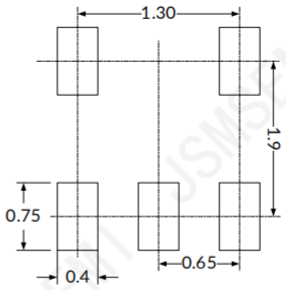

RECOMMENDED LAND PATTERN (Unit: mm)

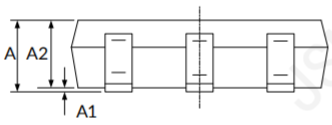

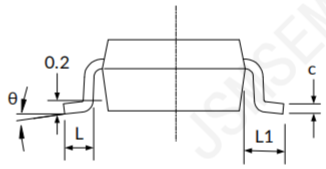

Symbol	Dimensions In Millimeters		Dimensions In Inches	
	Min	Max	Min	Max
A	0.900	1.100	0.035	0.043
A1	0.000	0.100	0.000	0.004
A2	0.900	1.000	0.035	0.039
b	0.150	0.350	0.006	0.014
c	0.080	0.150	0.003	0.006
D (1)	2.000	2.200	0.079	0.087
E (1)	1.150	1.350	0.045	0.053
E1	2.150	2.450	0.085	0.096
e	0.650(BSC)		0.026(BSC)	
e1	1.300(BSC)		0.051(BSC)	
L	0.260	0.460	0.010	0.018
L1	0.525		0.021	
θ	0°	8°	0°	8°

Revision History

Rev.	Change	Date
V1.0	Initial version	6/27/2021

Important Notice

JSMSEMI Semiconductor (JSMSEMI) PRODUCTS ARE NEITHER DESIGNED NOR INTENDED FOR USE IN MILITARY AND/OR AEROSPACE, AUTOMOTIVE OR MEDICAL DEVICES OR SYSTEMS UNLESS THE SPECIFIC JSMSEMI PRODUCTS ARE SPECIFICALLY DESIGNATED BY JSMSEMI FOR SUCH USE. BUYERS ACKNOWLEDGE AND AGREE THAT ANY SUCH USE OF JSMSEMI PRODUCTS WHICH JSMSEMI HAS NOT DESIGNATED FOR USE IN MILITARY AND/OR AEROSPACE, AUTOMOTIVE OR MEDICAL DEVICES OR SYSTEMS IS SOLELY AT THE BUYER’S RISK.

JSMSEMI assumes no liability for application assistance or customer product design. Customers are responsible for their products and applications using JSMSEMI products.

Resale of JSMSEMI products or services with statements diferent from or beyond the parameters stated by JSMSEMI for that product or service voids all express and any implied warranties for the associated JSMSEMI product or s ervice. JSMSEMI is not responsible or liable for any such statements.

JSMSEMI All Rights Reserved. Information and data in this document are owned by JSMSEMI wholly and may not be edited, reproduced, or redistributed in any way without the express written consent from JSMSEMI.

Any and all information described or contained herein are subject to change without notice due to product/technology improvement, etc.When designing equipment, refer to the "Delivery Specification" for the JSMSEMI product that you intend to use.

For additional information please contact Kevin@jsmsemi.com or visit www.jsmsemi.com