Customer: _____

SPECIFICATIONS

Product Name:	**Automotive Grade** **SMD Power Choke Coil**
Customer Part Number:	
MOTTO Part Number:	MSY1070-4R7M-V
Drawn No:	
Version:	

【For Customer Approval Only】

Approved By	Verified By	Re-checked By	Checked By

We are pleased in sending you herewith on speciation and drawings for your approval. Please return to us one copy "approval" with your approved。

Manufacturing Name:

HUIZHOU COILMX ELECTRONICS CO.,LTD

SHENZHEN MOTTO TECHNOLOGY CO., LTD

Approved By	Checked By	Issued By
Peter Zeng	**Jack Bai**	**Sumi Lin**

DATE:2024.05.17

SAMPLEMADE IN CHINA

Samples meet Rohs and Lead-free requirement

Automotive Grade SMD Power Choke Coil
MSY1070 Series

1. Feeatures



①High heat resistance:Operation up to 155℃ including self-heating
②High-reliability：
High vibration resistance as result of newly developed
Integral construction;under severe reliability conditions
Of automotive and other strenuous applications
Lightweight design, save space, suitable for high density SMT.
③High bias current: Excellent inductance stability using ferrous alloy
Magnetic material Low loss, high efficiency, wide application frequency.
Die-casting by low loss alloy powder: low impedance, small parasitic capacitance.
④Temp.stability:Excellent inductance stability over broad temp.range
⑤A composite structure, ultra low buzz noise. Low audible(buzz) noise:A
gapless structure achieved with metal composite core.
⑥High efficiency:Low DC resistance of winding and low eddy-current loss of
The core.
⑦Magnetic shielded structure: excellent resistance to electro magnetic interference(EMI).
⑧AEC-Q200 compliant and RoHS compliant
⑨ Operating temperature : -55℃ ～ +155℃(Including coil's temperature rise)

2. Applications

Excellent for power line DC-DC conversion applications used in power switching, personal computers and other handheld electronic equipment.

3. MOTTO PART NUMBERING SYSTEM

1	2	3	4	5	6	7		8	9	10	11		12
M	S	Y	1	0	7	0	-	4	R	7	M	-	V

COILMX Product Code

Dimensions

Inductance

(Example)

Code	Inductance
R68	0.68uH
4R7	4.7uH
330	33uH
101	100uH

Tolerance

Code	Inductance
J	±5%
K	±10%
L	±15%
M	±20%
P	±25%
N	±30%

Automotive Grade

4. Dimensions and Material unit: mm

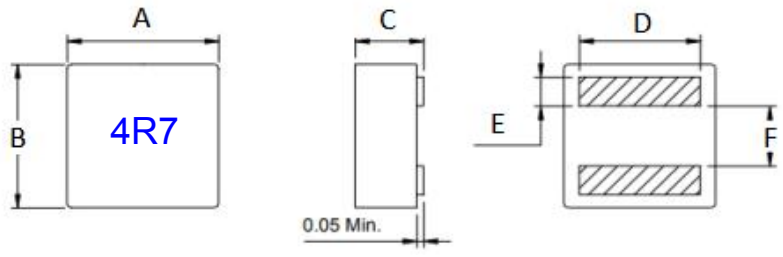

A	11.3±0.5
B	10.0±0.5
C	7.0Max
D	8.5Typ
E	2.2±0.3
F	4.0±0.3

惠州市仲恺四环南路锦好智慧园 B 栋 5~6 层
Tel: +86 0752-3398115 3398116 3398117
Http://www.coilcrafts.com www.coilmx.com

5. Material List

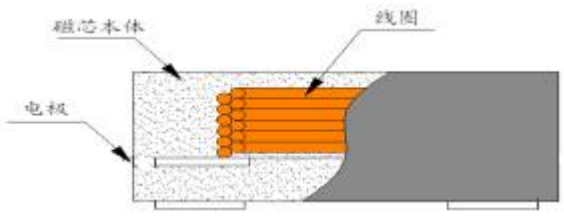

No	Item	Material
1	CORE	Carbonyl powder
2	WIRE	220℃ Flat wire
3	SOLDER	TIN-Sn99.95
4	INK	Black

6.Testing Conditions

All test data is based on 25℃ ambient.
DC current(A)that will cause an approximate △T40℃
DC current(A)that will cause L0 to drop approximately 30%Typ
Operating temperature range: -55℃~+155℃

7.Electrical Characteristics And Test Instruments

Customer Part No.	COILMX Part No.	Inductance (uH)	DCR(mΩ)		Isat (A)	Irms (A)
			typ	max		
	MSY1070-4R7M-V	4.7±20%	6.6	7.5	23	19.5

Test instruments and remarks

* MICROTEST 6377 meter for L adn DCR.
* MICROTEST 6377 and 6220 meter for IDC.
* L test condition: 100KHz/1V.
* Isat: Based on inductance change (|L_I-L|/L≤30%)
* Irms: Based on temperature rise(△T:40℃ TYP).

8.Electrical Characteristics Graph

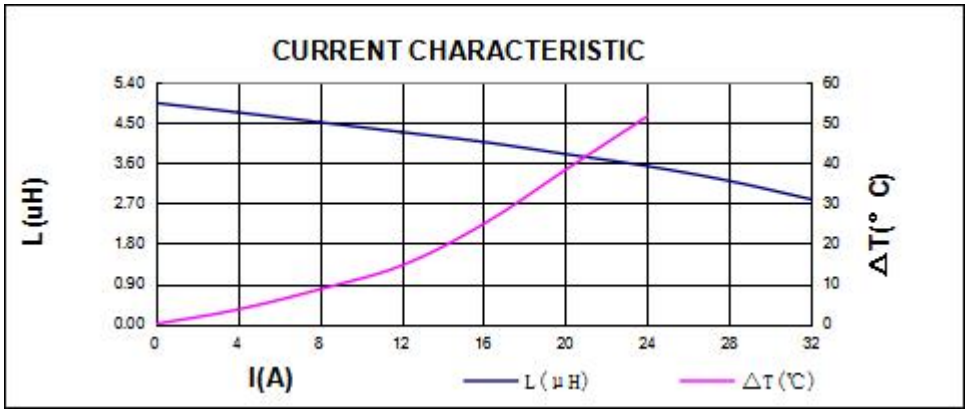

9.Test Data

SORT	ITEM	A	B	C	D	E	SHAPE:	
PRODUCT & DIMENSION	SPEC	11.3±0.5	10.0±0.5	7.0Max	8.5Typ	2.2±0.3	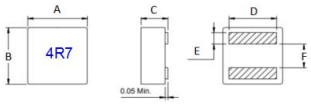	
	1	11.43	10.12	6.89	8.46	2.32		
	2	11.4	10.12	6.89	8.47	2.34		
	3	11.43	10.13	6.91	8.49	2.33		
	4	11.45	10.13	6.86	8.50	2.31		
	5	11.44	10.12	6.95	8.48	2.32		
	X	11.43	10.12	6.90	8.48	2.32		
	R	0.05	0.01	0.09	0.04	0.03		
ELECTRICAL & REQUIREMENTS	ITEM	L(μH)	DCR (mΩ)	I sat(A)	DC BIAS	Irms		
	SPEC	4.7μH±20%	7.5mΩMAX	23A TYP L0A*70%		19.5A TYP △T≤40℃		
	1	4.93	6.67	3.70	-24.9%	OK		
	2	4.61	6.69	3.64	-21.0%	OK		
	3	4.98	6.70	3.73	-25.1%	OK		
	4	4.93	6.65	3.68	-25.4%	OK		
	5	4.59	6.67	3.63	-20.9%	OK		
	6	4.92	6.67	3.74	-24.0%	OK		
	7	4.92	6.64	3.73	-24.2%	OK		
	8	4.68	6.65	3.67	-21.6%	OK		
	9	4.96	6.67	3.71	-25.2%	OK		
	10	4.93	6.68	3.70	-24.9%	OK		
	X	4.85	6.67	3.69	-23.7%	OK		
	R	0.39	0.06	0.11	0.04	OK		

8.Reliability and Test Condition

项目 Item	规格与需求 Specification and Requirement	测试条件与方法 Test Method and Conditions
External Visual 外观	与产品规格书一致。 Consistent with product specifications.	目视。 Visually.
Physical Dimension 物理尺寸	根据产品规格书标示尺寸，用相关量具测量。 According to the size indicated in the product specification, measure with relevant measuring tools.	用数显卡尺测量 Digital caliper measure
High Temperature Exposure(Storage) 高温暴露（存储）	感值变化：不超过±5%，且无破裂等机械损伤产生。 Inductance change: Within ±5% Without mechanical damage such as break.	温度：155℃； Temperature:155℃; 时间：1000 小时。 Time: 1000h.
Temperature Cycling 温度循环	感值变化：不超过±5%，且无破裂等机械损伤产生。 Inductance change: Within ±5% Without mechanical damage such as break.	1000 循环（-40℃ 到 +155℃）； 1000cycles(-40℃ to +155℃); 驻留时间：30 分钟; Dwell time: 30min; 转换时间：≤1 秒。 transfer time:≤1s.
Biased Humidity 偏高湿度	感值变化：不超过±5%，且无破裂等机械损伤产生。 Inductance change: Within ±5% Without mechanical damage such as break.	预调节：24 小时@40℃; Pre-conditioning: 24h@40℃; 持续时间：1000 小时; Duration:1000h; Ta=85℃/85%湿度; Ta=85℃/85%RH.
Operational Life 工作寿命	感值变化：不超过±5%，且无破裂等机械损伤产生。 Inductance change: Within ±5% Without mechanical damage such as break.	持续时间：1000 小时，Tc=155℃; Duration:1000h,Tc=155℃; 额定电流：1A。 Rated Current: 1A.
Resistance to Solvents 抗溶剂性	无破裂等机械损伤产生。 Without mechanical damage such as break.	Mixture solvent(volume): 1/4 isopropyl alcohol, 3/4 mixture of 80% kerosene and 20% ethylbenzene; 混合溶剂（体积）：1/4 异丙醇，3/4 混合的 80%煤油和 20%乙苯； Brush: 4 rows and 10columns; 刷子：4 行 10 列； Dwell time: 3.2 min; Immersion times: 3 times; 停留时间：3.2 分钟； 浸入次数：3 次； Brush times: 10 times. 涂刷次数：10 次。
Mechanical Shock 机械冲击	感值变化：不超过±5%，且无破裂等机械损伤产生。 Inductance change: Within ±5% Without mechanical damage such as break.	脉冲形状：半正弦； Pulse Shape: half-sine; 加速度：100g； Acceleration:100g; 脉冲宽度：6ms; Pulse width:6ms; 方向：±X，±Y，±Z 轴; Orientation:±X，±Y，±Z axis; 3 次冲击/方向，总共 18 次冲击。 3 shocks/direction, total 18shocks.
Vibration 振动	感值变化：不超过±5%，且无破裂等机械损伤产生。 Inductance change: Within ±5% Without mechanical damage such as break.	频率：(10～2000)Hz; Frequency:(10~2000)Hz; 峰值加速度：5g； Peak acceleration:5g; 方向：X，Y，Z； Orientation:X、Y、Z; 每个方向 12 个循环（总共 36 个循环）; 12 cycles/direction(total 36 cycles); 每个循环 20 分钟（总计 12 小时）。 20 min for each cycle (total 12h).
Resistance to Soldering Heat 抗焊接热	无破裂等机械损伤产生。 Without mechanical damage such as break.	MIL-STD-202 中定义的条件 B（焊料浸入），方法 210； Condition B(Solder dip) defined in MIL-STD-202, Method 210； 样品无预热； No Pre-heat for samples; 温度：260℃; Temperature:260℃; 时间：20±1s; Time:20±1s; 浸入和浸出速率：25±5mm / s。 Immersion and emersion rate:25±5mm/s.
ESD 静电放电	感值变化：不超过±5%，且无破裂等机械损伤产生。 Inductance change: Within ±5% Without mechanical damage such as break.	电压等级：25kV; Voltage level: 25kV; 放电方式：直接接触（6kV）/空气放电（12kV，16kV，25kV）。 Discharge mode: Direct contact(6kV)/Air charge(12kV,16kV,25kV).
Solderability 可焊性	沾锡面积不得小于 95%上锡面。 Terminals area must have 95% min solder coverage.	蒸汽温度：93℃，8h； 烘烤：100℃，1h； Steam temperature:93℃,8h; Bake:100℃,1h; 焊接温度：260℃。 Solder temperature:260℃.

Electrical Characterization 电气特性	符合客户产品规格书要求。 Meet the requirements of customer product specifications.	特性在室温， -55℃，155℃下进行；Characterization @ room temperate,-55℃,155℃; L @ 0 至 2.9A，100 千赫兹，1 伏特; L @ 0 to 2.9A, 100kHz,1V; L @ 1, 10, 100, 500, 800, 1000 千赫兹. L @ 1，10，100，500，800，1000 kHz。
Board flex 板弯曲	无破裂等机械损伤产生。 Without mechanical damage such as break.	电路板挠度：2mm； Deflection of Board Flex:2mm; 保持时间：60s。 Holding time:60s.
Terminal Strength(SMD) 端子强度（表面贴 装元件）	无破裂等机械损伤产生。 Without mechanical damage such as break.	施加力：17.7 牛; Applied force:17.7N; 保持时间：最短 60s 的保持时间。 Holding time:60s minimum holding time.

9. Packaging

9.1、尺寸 Dimensions

9.1.1 包装料带尺寸 Tape packaging dimensions

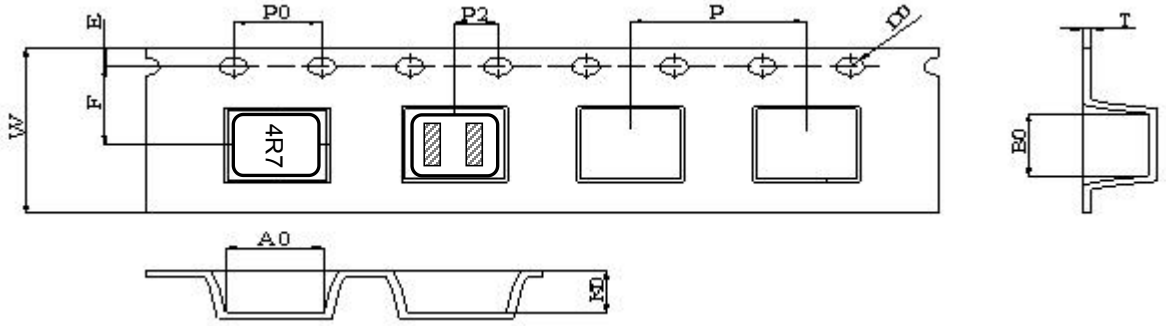

W	A0	B0	K0	P	F	E	D0	P0	T
24.00 ±0.30	12.40 ±0.10	11.50 ±0.10	6.30 ±0.10	16.00 ±0.10	11.50 ±0.10	1.75 ±0.10	1.50 ±0.10	4.00 ±0.10	0.35 ±0.05

9.1.2 卷轴尺寸 Reel dimensions

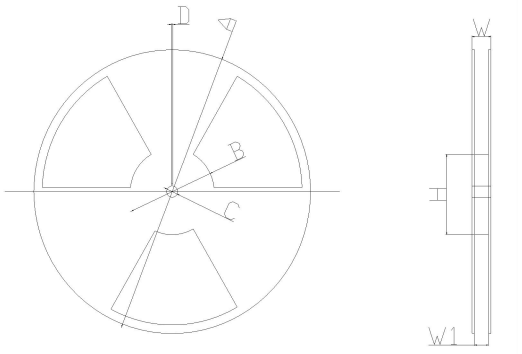

项目	尺寸(mm)
A	330.0 ± 2.0
B	100.0 ± 1.0
C	13.0 ± 1.0
D	1.9 ± 0.4
W	30.4 Max
W1	24.0 ± 1.0

9. Packaging

9.1.3 外箱尺寸 Carton dimensions

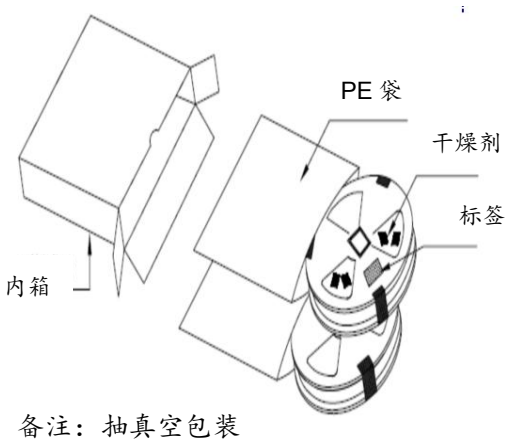

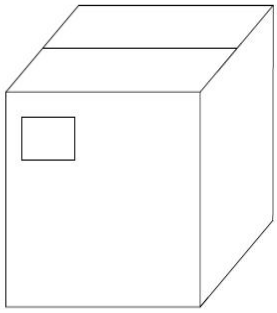

项目	数量(PCS)
1 卷轴	400
1 内箱	800
1 外箱	2400

PE 袋：47*41cm
内 箱：34*34*6.5cm
外 箱：36*36*23cm

备注：抽真空包装

10. Reflow curve

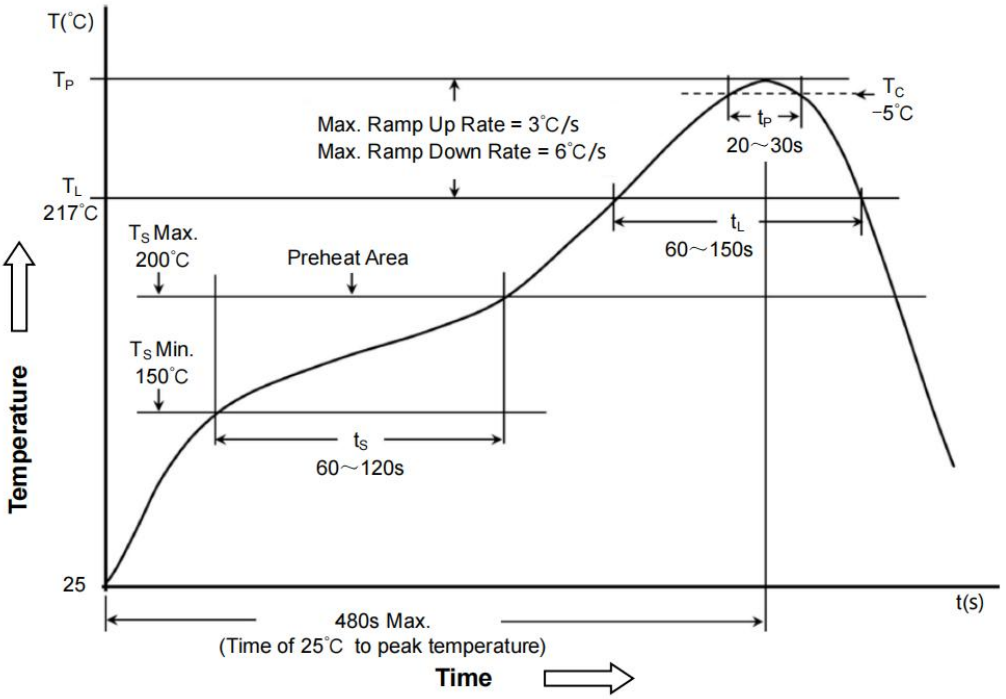

Soldering iron method ： 350±5℃ Max.3 seconds.

Reflow Soldering	Tp:255~260℃	Max.30 seconds (tp)
	217℃	60~150 seconds
Pre-Heat	150 ~ 200℃	60~120 seconds
Time 25℃ to peak temperature	8 minutes max.	

11. Notice of Use 使用注意事项

11.1 Product in packing storage condition : temperature 5～40℃, RH≤70%.
产品在包装中的保存条件：温度 5～40℃，相对湿度小于等于 70%。
If taking out for use, the remaining products should be sealed in plastic bags and preserved in accordance with the above conditions, to avoid oxidation of terminals (electrodes), affecting soldering status.
如果取出使用，剩余的产品请用胶袋密封按照以上条件保存，避免端子(电极)氧化，影响焊接状态。

11.2 A storage of **COILMX** Electronic products for longer than 12 months is not recommended, Within other effects, the terminals may suffer degradation, resulting in bad solderability. Therefore, all products shall be used within the period of 12 months based on the day of shipment.
迈翔科技电子产品储存期不建议超过 12 个月，在其他影响下，端子可能会退化，导致焊接性差。
因此，所有产品应使用在 12 个月内以出货日为基础。

11.3 Do not keep products in unsuitable storage conditions, such as areas susceptible to high temperatures, high humidity, dust or corrosion.
请不要将产品保存于高温、高湿、有尘埃、腐蚀性气体的不适合环境中。

11.4 Always handle products with care.
请小心轻放，避免由于产品的跌落或取用不当而引致的损坏。

11.5 Don't touch electrodes directly with bare hands as oil secretions may inhibit soldering. Always ensure optimum conditions for soldering.
手上的油脂会导致可焊性降低，应避免用手直接接触端子。

11.6 When this product will be used on a similar or new project to the original one, sometimes it might be unable to satisfy the specifications due to different condition of usage.
当本产品应用于相似或新的产品上时，电性可能因使用条件的不同而与规格产生一定出入。

11.7 This inductor itself does not have any protective function in abnormal condition, such as overload, short-circuit, open-circuit conditions, etc. Therefore, it shall be confirmed that there is no risk of smoke, fire, dielectric withstand voltage, insulation resistance, etc., or use in abnormal conditions protective devicesor protection circuit in the end product.
在过载、短路、开路等不正常条件下，本电感产品无任何自我保护功能。
因此，请确保产品使用中不含烟、火、高压、绝缘等危险使用条件，或使用在不正常条件下的保护作用装置或电路中。

11.8 Hi-Pot test with higher voltage than spec value will damage insulating material and shorten its life.
高电压绝缘测试会对本产品绝缘材料造成损伤，并缩短产品寿命。

11.9 If using in potting compound, the magnet wire coating might be damaged, please consult with us.
如果将本产品用于埋制复合组件，有可能会对本产品的金属线表层造成腐蚀，请咨询本公司。

11.10 Refrain from rinsing coils. If necessary, please consult with us.
请不要清洗产品，如果需要清洗，请咨询本公司。

惠州市仲恺四环南路锦好智慧园 B 栋 5~6 层
Tel: +86 0752-3398115 3398116 3398117
Http://www.coilcrafts.com www.coilmx.com