# LM-AZ1145-04F

## ULTRA LOW CAPACITANCE TVS DIODE ARRAY

### Features

- Ultra low capacitance: 0.3pF typical (I/O to I/O)
- Ultra low leakage: nA level
- Low operating voltage: 5V
- Low clamping voltage
- Up to 4 lines protects
- Leadless flow-through package
- Complies with following standards:
  - IEC 61000-4-2 (ESD) immunity test
    - Air discharge: ±30kV
    - Contact discharge: ±25kV
  - IEC61000-4-5 (Lightning) 5A (8/20μs)
- RoHS Compliant

### Applications

- HDMI 1.3 & 1.4& 2.0, USB 2.0 & 3.0 and MDDI ports
- 10/100/1000 Ethernet
- Monitors and flat panel displays
- Set-top box and Digital TV
- Video graphics cards
- Digital Video Interface (DVI)
- Notebook Computers
- PCI Express and Serial SATA Ports

### Mechanical Characteristics

- Package: DFN2510-10 (2.5×1.0×0.5mm)
- Lead Finish: Matte Tin
- Case Material: “Green” Molding Compound.
- UL Flammability Classification Rating 94V-0
- Moisture Sensitivity: Level 3 per J-STD-020
- Terminal Connections: See Diagram Below
- Marking Information: See Below

### Dimensions DFN2510P10

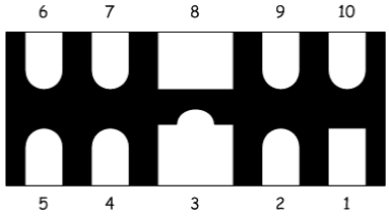


### Pin Configuration

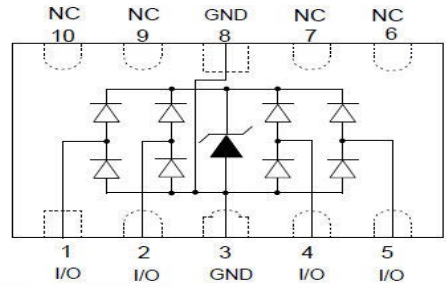


### Marking Information

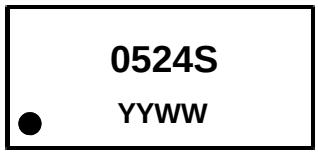


0524S = Device Marking Code
YYWW = Date Code
Dot denotes Pin1

### Ordering Information

| Part Number | Packaging | Reel Size |
|---|---|---|
| LM-AZ1145-04F | 3000/Tape & Reel | 7 inch |

## Absolute Maximum Ratings ($T_A$=25°C unless otherwise specified)

| Parameter | Symbol | Value | Unit |
|---|---|---|---|
| Peak Pulse Power (8/20μs) | Ppk | 75 | W |
| Peak Pulse Current (8/20μs) | $I_{PP}$ | 5 | A |
| ESD per IEC 61000−4−2 (Air)<br>ESD per IEC 61000−4−2 (Contact) | $V_{ESD}$ | ±30<br>±25 | kV |
| Operating Temperature Range | $T_J$ | −55 to +125 | °C |
| Storage Temperature Range | Tstg | −55 to +150 | °C |

## Electrical Characteristics ($T_A$=25°C unless otherwise specified)

| Parameter | Symbol | Min | Typ | Max | Unit | Test Condition |
|---|---|---|---|---|---|---|
| Reverse Working Voltage | $V_{RWM}$ | | | 5 | V | Any I/O pin to ground |
| Breakdown Voltage | $V_{BR}$ | 6 | | | V | $I_T$ = 1mA, any I/O pin to ground |
| Reverse Leakage Current | $I_R$ | | | 0.1 | μA | $V_{RWM}$ = 5V, any I/O pin to ground |
| Clamping Voltage | $V_C$ | | | 9.8 | V | $I_{PP}$ = 1A (8 x 20μs pulse), any I/O pin to ground |
| Clamping Voltage | $V_C$ | | | 15 | V | $I_{PP}$ = 5A (8 x 20μs pulse), any I/O pin to ground |
| Junction Capacitance | $C_J$ | | 0.3 | 0.4 | pF | VR = 0V, f = 1MHz, between I/O pins |
| Junction Capacitance | $C_J$ | | | 0.8 | pF | VR = 0V, f = 1MHz, any I/O pin to ground |

## Typical Performance Characteristics ($T_A$=25°C unless otherwise Specified)

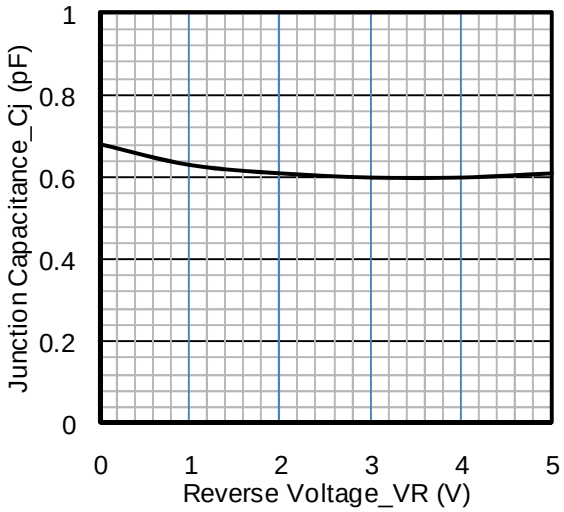


**Junction Capacitance vs. Reverse Voltage**

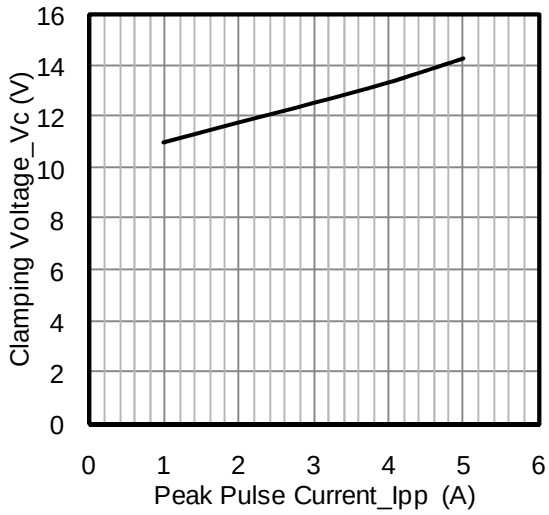


**Clamping Voltage vs. Peak Pulse Current**

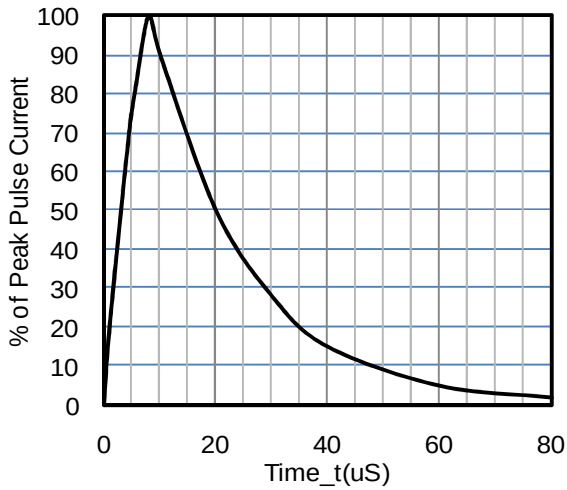


**8 X 20uS Pulse Waveform**

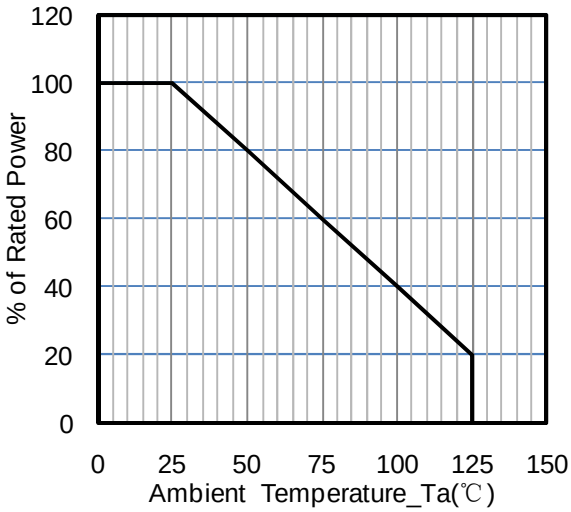


**Power Derating Curve**

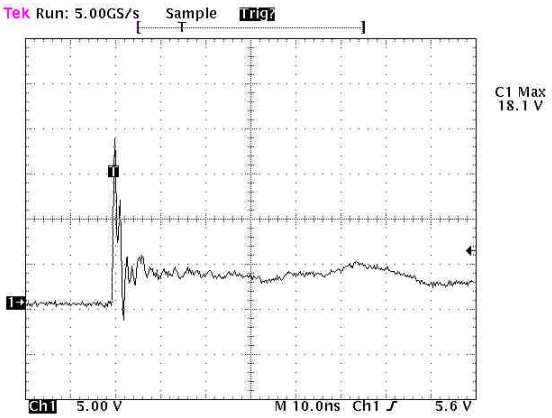


**ESD Clamping Voltage**

**8 kV Contact per IEC61000−4−2**

## Typical Application

The LM-AZ1145-04F is designed for easy PCB layout by allowing the traces to run straight through the device. The PCB traces could be used to connect the pin pairs for each line. For example, line 1 enters at pin 1 and exits at pin 10 and the PCB trace connects Pin 1 and Pin 10 together. Ground is connected at Pin 3 and Pin 8.

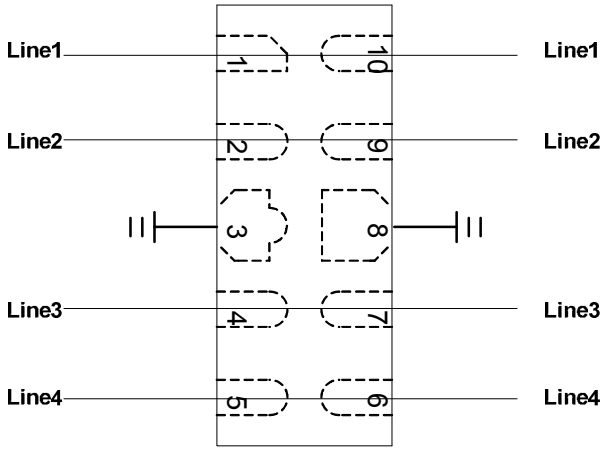


## LM-AZ1145-04F on USB 3.0 Port Application

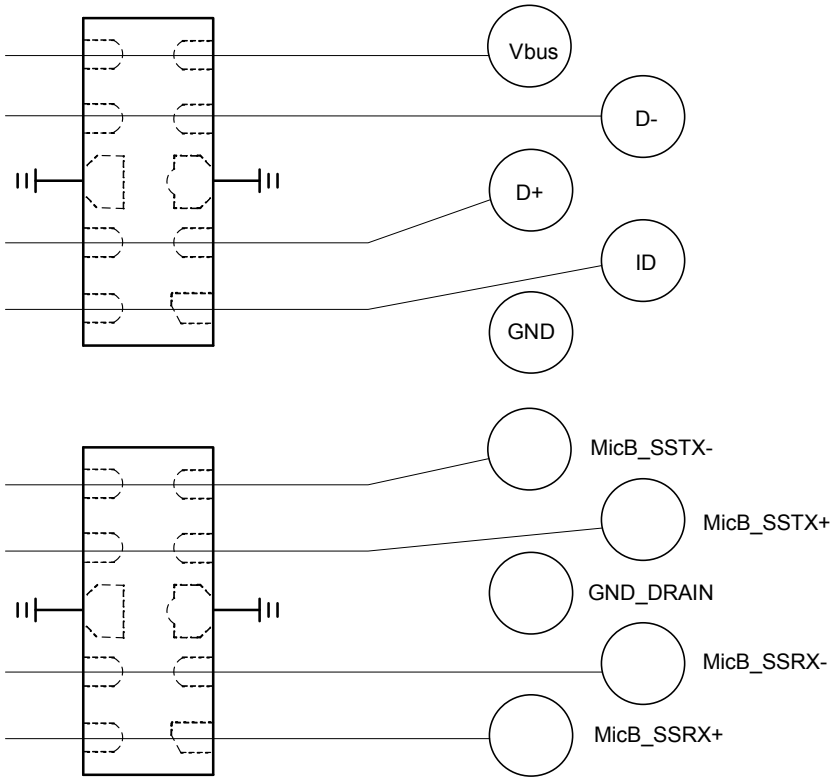

## LM-AZ1145-04F on DVI Port Application

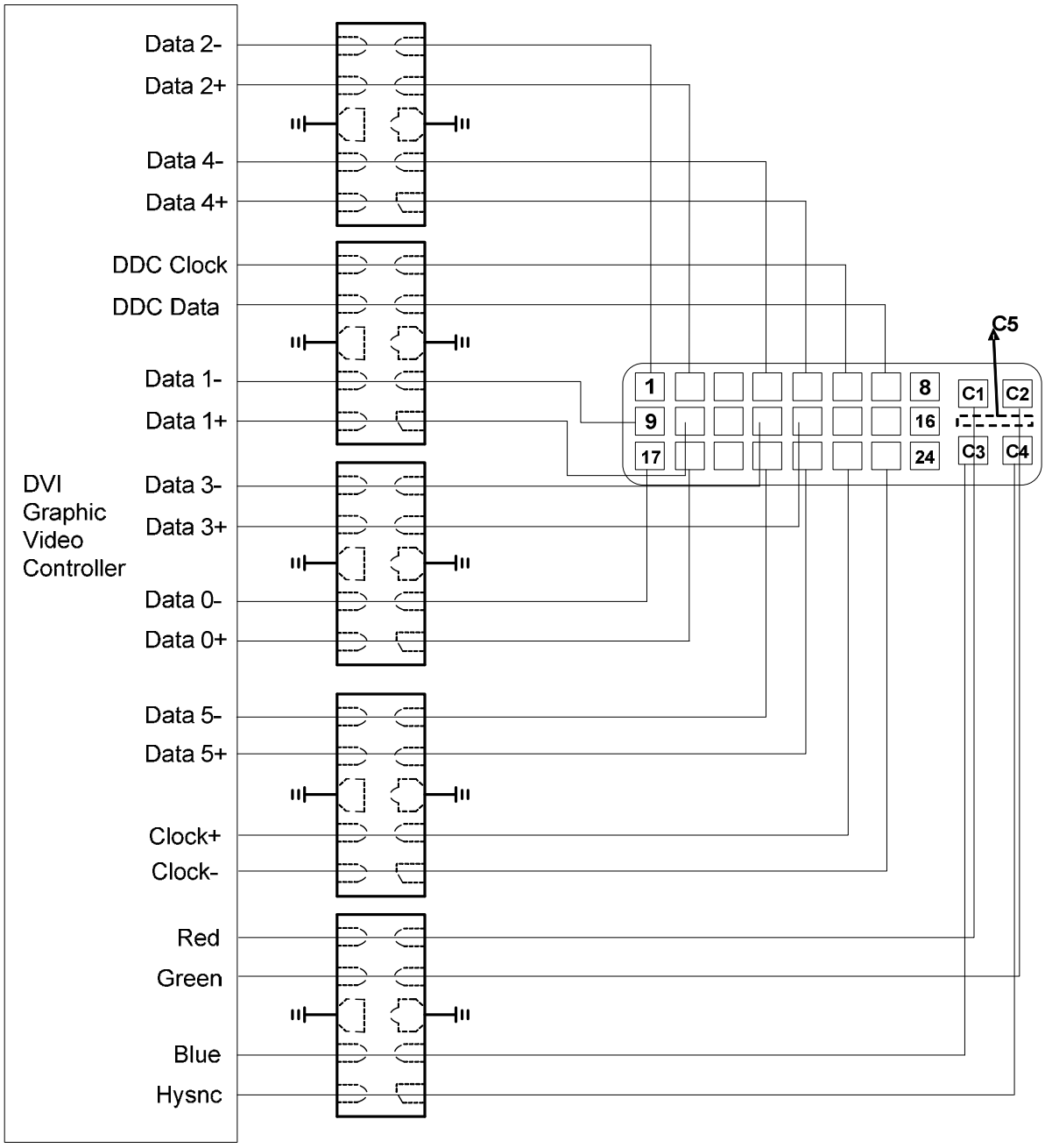

## LM-AZ1145-04F on HDMI Port Application

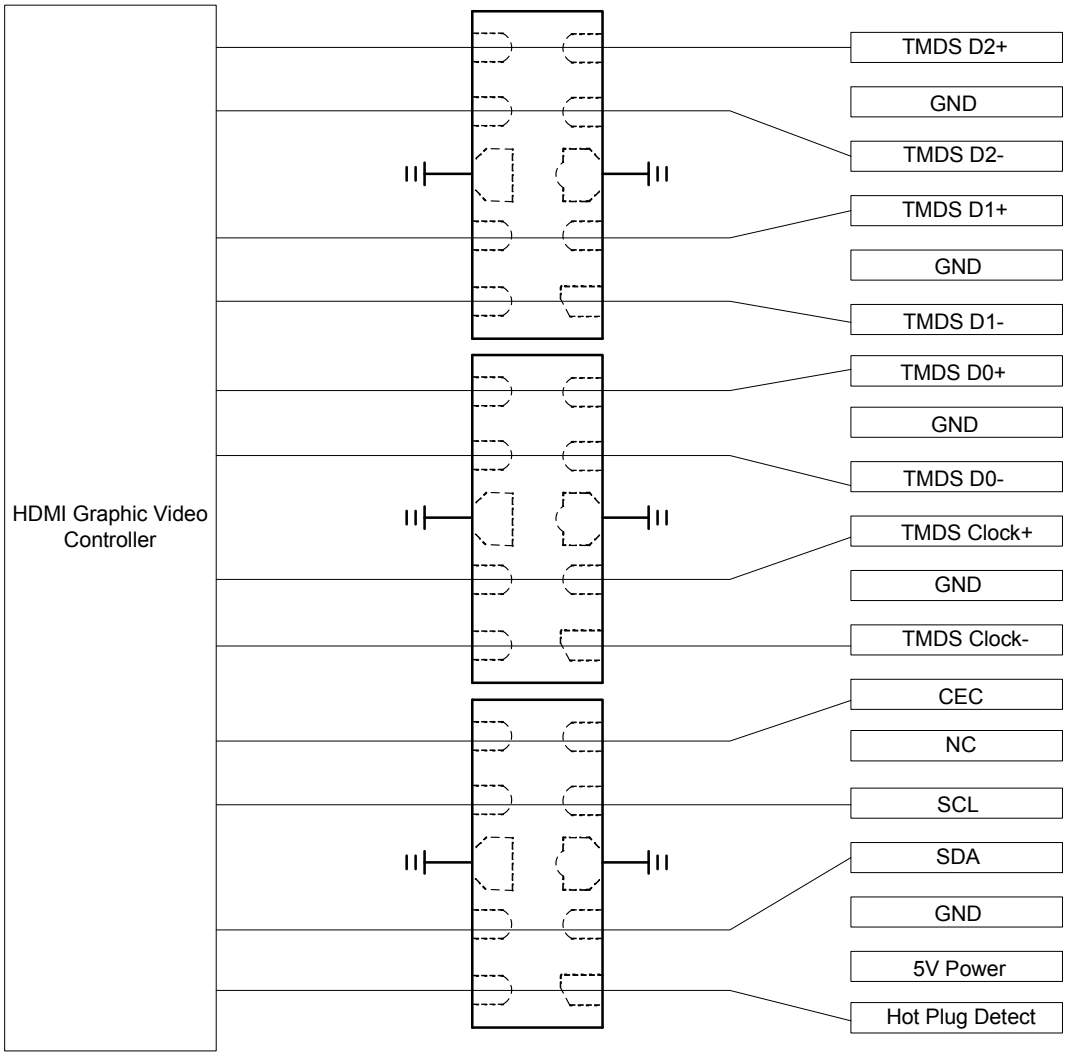

## LM-AZ1145-04F on VGA Port Application

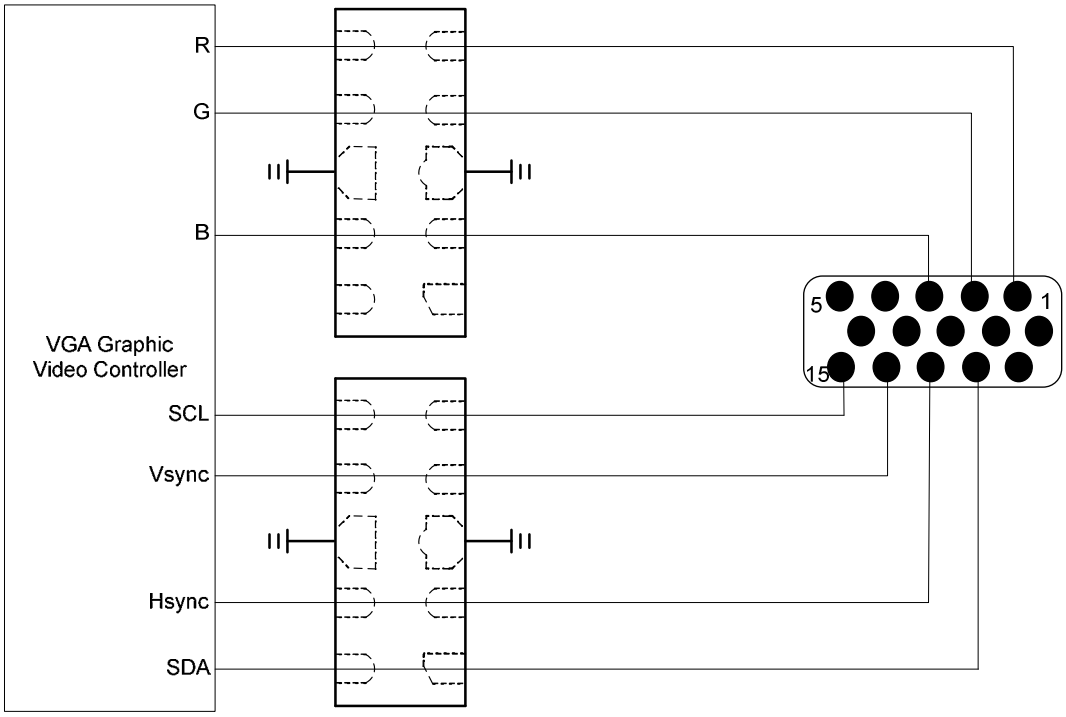


## LM-AZ1145-04F on eSATA Port Application

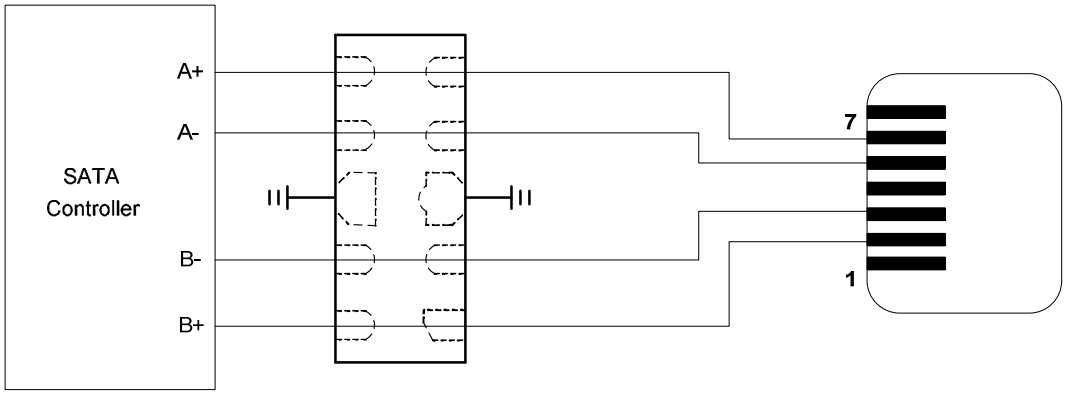

## LM-AZ1145-04F on MDDI Port Application

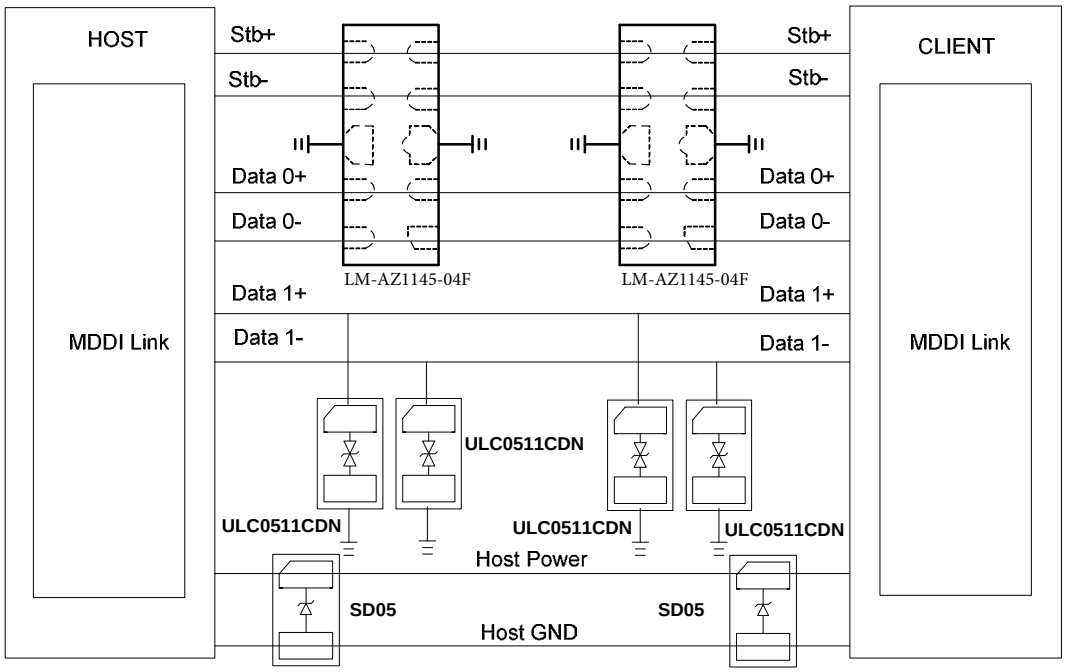


## LM-AZ1145-04F on 10/100 Base Ethernet Port Application

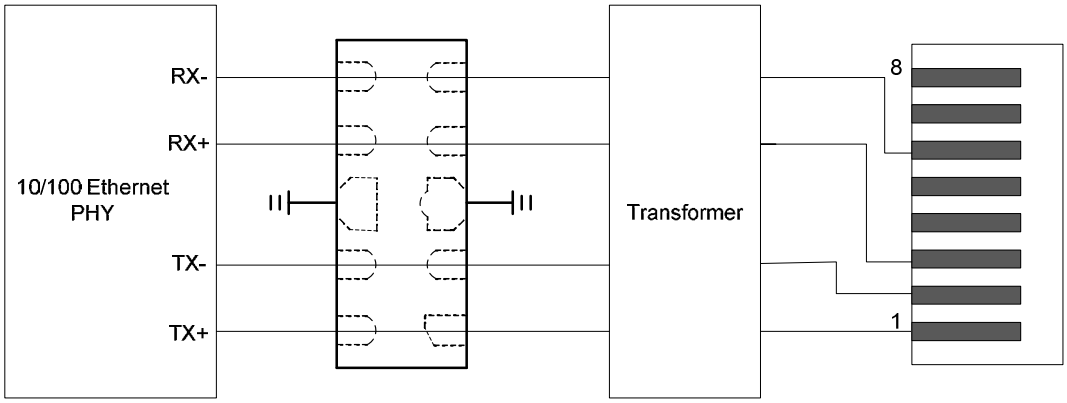

## DFN2510-10 Package Outline Drawing

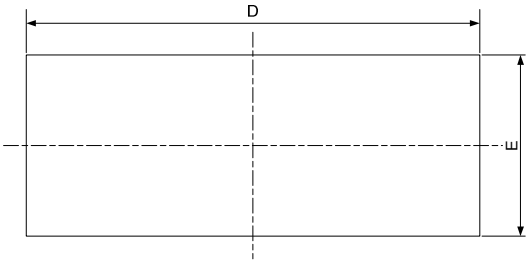


TOP VIEW

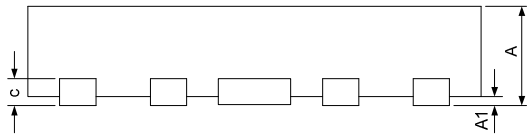


SIDE VIEW

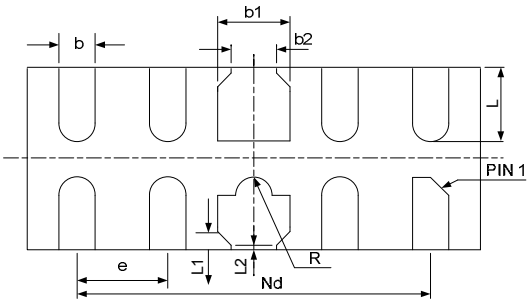


BOTTOM VIEW

| SYM | DIMENSIONS | | | | | |
|---|---|---|---|---|---|---|
| | MILLIMETERS | | | INCHES | | |
| | MIN | NOM | MAX | MIN | NOM | MAX |
| A | 0.45 | 0.50 | 0.55 | 0.018 | 0.020 | 0.022 |
| A1 | 0.00 | 0.02 | 0.05 | 0.000 | 0.001 | 0.002 |
| b | 0.15 | 0.20 | 0.25 | 0.006 | 0.008 | 0.010 |
| b1 | 0.35 | 0.40 | 0.45 | 0.014 | 0.016 | 0.018 |
| b2 | 0.20 | 0.25 | 0.30 | 0.008 | 0.010 | 0.012 |
| c | 0.10 | 0.15 | 0.20 | 0.004 | 0.006 | 0.008 |
| D | 2.45 | 2.50 | 2.55 | 0.098 | 0.100 | 0.102 |
| e | 0.50BSC | | | 0.020BSC | | |
| Nd | 2.00BSC | | | 0.080BSC | | |
| E | 0.95 | 1.00 | 1.05 | 0.038 | 0.040 | 0.042 |
| L | 0.35 | 0.40 | 0.45 | 0.014 | 0.016 | 0.018 |
| L1 | 0.075REF | | | 0.003REF | | |
| L2 | 0.050REF | | | 0.002REF | | |
| h | 0.08 | 0.12 | 0.15 | 0.003 | 0.005 | 0.006 |
| R | 0.05 | 0.10 | 0.15 | 0.002 | 0.004 | 0.006 |

## Suggested Land Pattern

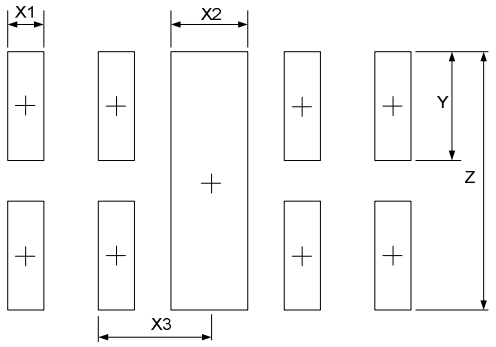


| SYM | DIMENSIONS | |
|---|---|---|
| | MILLIMETERS | INCHES |
| X1 | 0.200 | 0.008 |
| X2 | 0.400 | 0.016 |
| X3 | 0.500 | 0.020 |
| Y | 0.600 | 0.024 |
| Z | 1.400 | 0.056 |

NOTICE

Leiditech reserves the right to make modifications,enhancements,improvements,corrections or other changes without further notice to any product herein. Leiditech does not assume any liability arising out of the application or use of any product described herein.

Shanghai Leiditech Electronic Co.,Ltd
Email: sale1@leiditech.com
Tel : +86- 021 50828806
Fax : +86- 021 50477059