LM-AZ2025-02S

2-Line Bi-directional TVS Diode Array

Features

- Ultra low leakage: nA level
- Operating voltage: 5V
- Low clamping voltage
- Complies with following standards:
  - – IEC 61000-4-2 (ESD) immunity test
    - Air discharge: ±30kV
    - Contact discharge: ±30kV
  - – IEC61000-4-4 (EFT) 40A (5/50ns)
  - – IEC61000-4-5 (Lightning) 22A (8/20μs)
- RoHS Compliant

Dimensions SOT-23



Pin Configuration

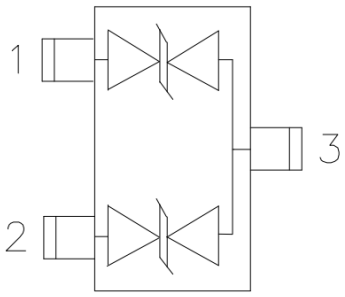

Applications

- Cellular Handsets and Accessories
- Notebooks and Handhelds
- Portable Instrumentation
- Set Top Box
- Industrial Controls
- Server and Desktop PC

Mechanical Characteristics

- Package: SOT-23
- Lead Finish: Lead Free
- UL Flammability Classification Rating 94V-0
- Quantity Per Reel:3,000pcs
- Reel Size:7inch
- Device Marking: 5B2

Absolute Maximum Ratings (Tamb=25°C unless otherwise specified)

Parameter	Symbol	Value	Unit
Peak Pulse Power (8/20μs)	Ppp	400	W
ESD per IEC 61000−4−2 (Air)	V_{ESD}	±30	kV
ESD per IEC 61000−4−2 (Contact)		±30	
Operating Temperature Range	T_J	-55 to +125	℃
Storage Temperature Range	T_{STJ}	-55 to +150	℃

Electrical Characteristics(TA=25°C unless otherwise specified)

Parameter	Symbol	Test Condition	Min	Typ	Max	Unit
Reverse Working Voltage	V_{RWM}				5	V
Breakdown Voltage	V_{BR}	I_T = 1mA	6			V
Reverse Leakage Current	I_R	V_{RWM} = 5V			1	μA
Clamping Voltage	V_C	I_{PP} = 22A (8 x 20μs pulse)			20	V
Junction Capacitance	C_J	V_R = 0V, f = 1MHz		65		pF

Typical Performance Characteristics (T_A=25°C unless otherwise Specified)

Figure 1: Peak Pulse Power vs. Pulse Time

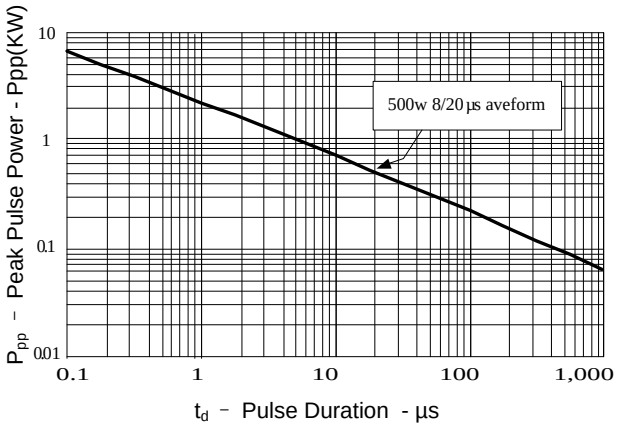

Figure 2: Power Derating Curve

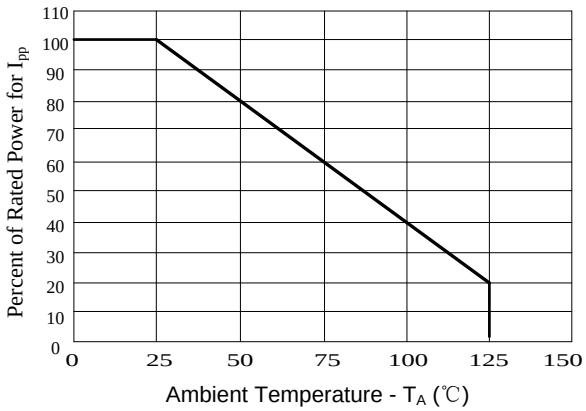

Figure3: Pulse Waveform

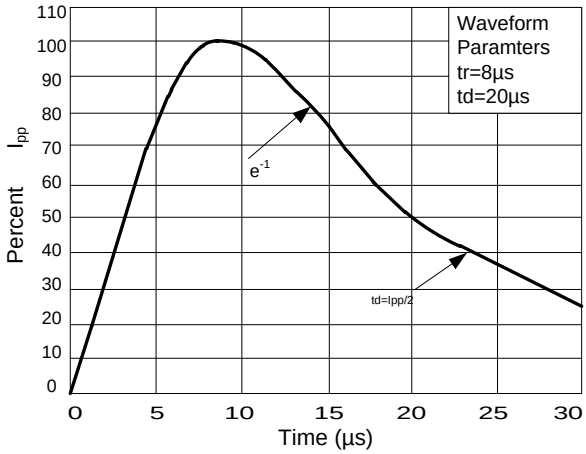

Figure 4: Clamping Voltage vs.Ipp

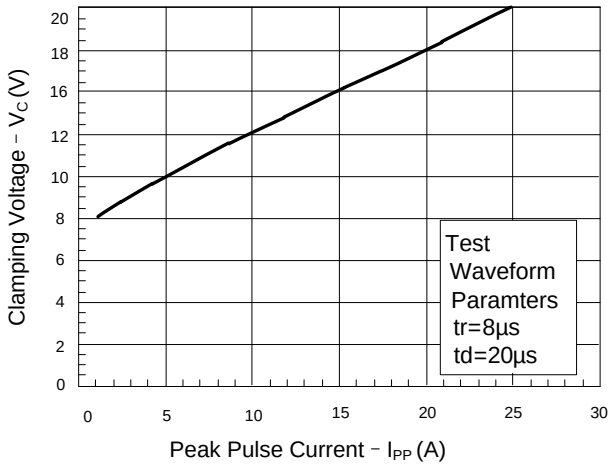

SOT-23 Package Outline Drawing

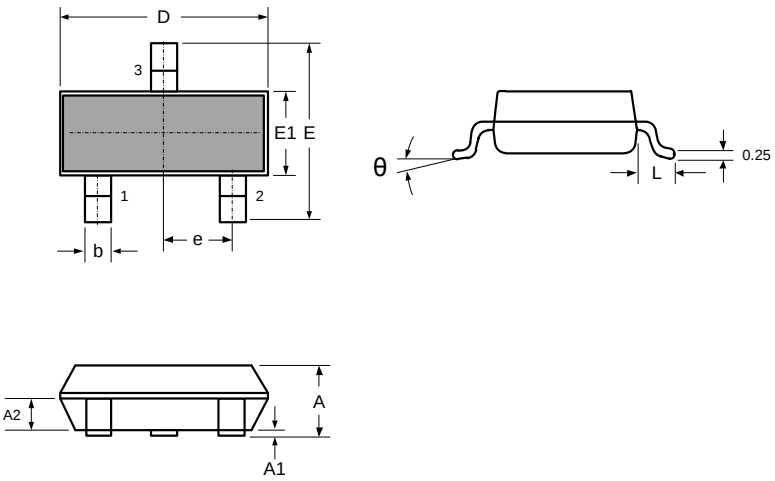

DIMENSIONS				
SYMBOL	MILLIMETER		INCHES	
	MIN	MAX	MIN	MAX
A	0.900	1.150	0.035	0.045
A1	0.000	0.100	0.000	0.004
A2	0.900	1.050	0.035	0.041
D	2.800	3.000	0.110	0.118
b	0.300	0.500	0.012	0.020
E	2.250	2.550	0.089	0.100
E1	1.200	1.400	0.047	0.055
e	0.950 BSC		0.037 BSC	
L	0.300	0.500	0.012	0.020
θ	0	8°	0	8°

NOTICE
Leiditech reserves the right to make modifications,enhancements,improvements,corrections or other changes without further notice to any product herein. Leiditech does not assume any liability arising out of the application or use of any product described herein.

Shanghai Leiditech Electronic Co.,Ltd
Email: sale1@leiditech.com
Tel : +86- 021 50828806
Fax : +86- 021 50477059