LM-AZ5215-01F

1-Line Bi-directional TVS Diode

Features

- Ultra low leakage: nA level
- Operating voltage: 5V
- Low clamping voltage
- Complies with following standards:
  - – IEC 61000-4-2 (ESD) immunity test
    - Air discharge: ±25kV
    - Contact discharge: ±22kV
  - – IEC61000-4-4 (EFT) 40A (5/50ns)
  - – IEC61000-4-5 (Lightning) 4A (8/20μs)
- RoHS Compliant

Dimensions DFN1006



Pin Configuration

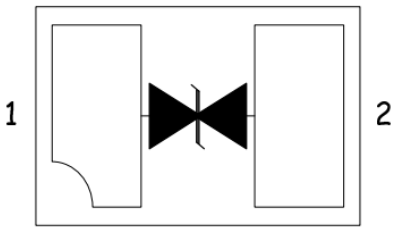

Applications

- USB Ports
- SIM Ports
- Smart Phones
- Wireless Systems
- Set-top box and digital TV
- Digital video interface (DVI)
- Ethernet 10/100/1000 Base T

Mechanical Characteristics

- Package: DFN1006
- Lead Finish: Lead Free
- Moisture Sensitivity: Level 3 per J-STD-020
- UL Flammability Classification Rating 94V-0
- Quantity Per Reel:10,000pcs
- Reel Size:7 inch
- Device Marking: 24

Absolute Maximum Ratings(Tamb=25°C unless otherwise specified)

Parameter	Symbol	Value	Unit
Peak Pulse Power (8/20μs)	Ppp	100	W
ESD per IEC 61000−4−2 (Air)	V_{ESD}	± 25	kV
ESD per IEC 61000−4−2 (Contact)		± 22	
Operating Temperature Range	T_J	-55 to +150	℃
Storage Temperature Range	T_{STJ}	-55 to +150	℃

Electrical Characteristics(TA=25°C unless otherwise specified)

Parameter	Symbol	Test Condition	Min	Typ	Max	Unit
Reverse Working Voltage	V_{RWM}				5	V
Breakdown Voltage	V_{BR}	I_T = 1mA	6.5		9.5	V
Reverse Leakage Current	I_R	V_{RWM} = 5V			1	μA
Clamping Voltage	V_C	I_{PP} = 1A (8 x 20 μs pulse)			12	V
Clamping Voltage	V_C	I_{PP} = 4A (8 x 20 μs pulse)			25	V
Junction Capacitance	C_J	V_R = 0V, f = 1MHz		0.3		pF

Typical Performance Characteristics (T_A=25°C unless otherwise Specified)

Fig.1 - Peak Pulse Power Rating

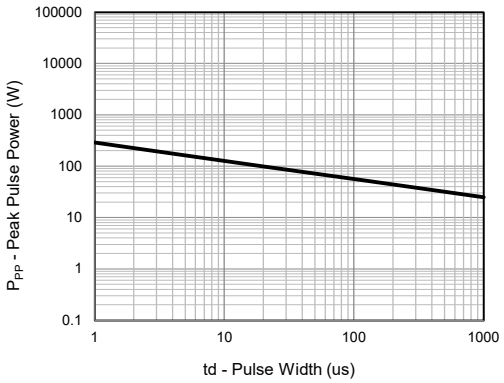

Fig.2 - Pulse Derating Curve

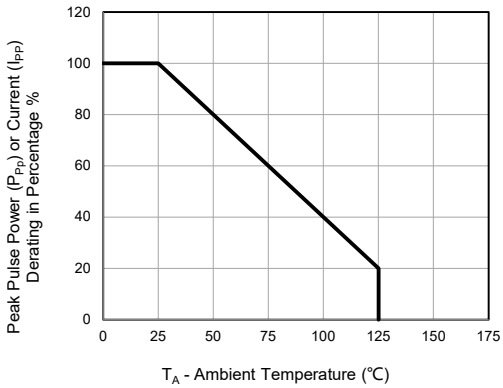

Fig.3 - 8/20us Pulse Waveform

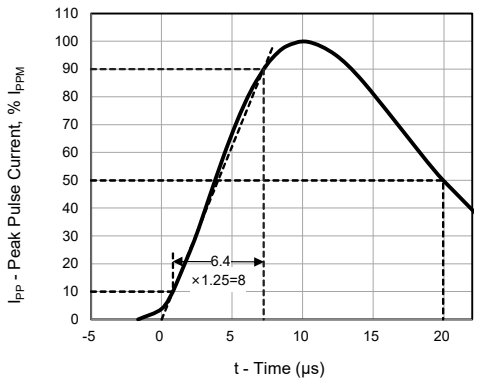

Fig.4 - Typical Clamping Voltage

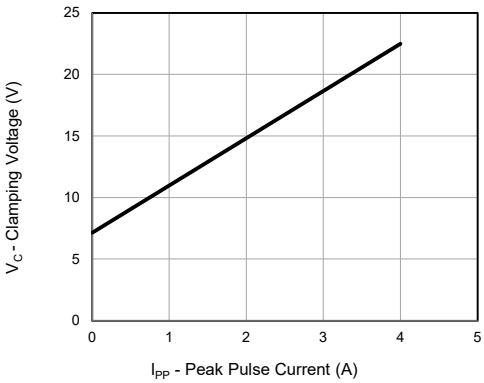

Fig.5 - ESD Pulse Waveform (IEC61000-4-2)

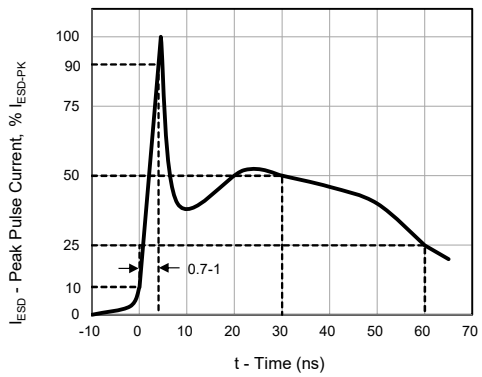

Fig.6 - 5/50ns EFT Waveform (IEC61000-4-4)

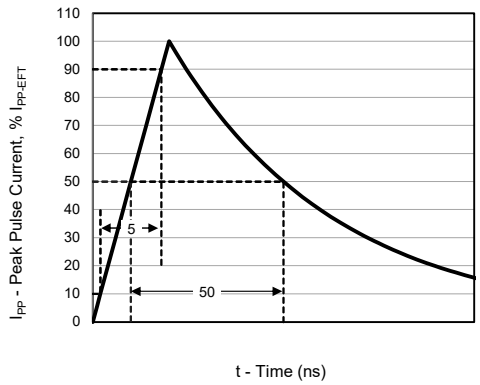

DFN1006 Package Outline Drawing

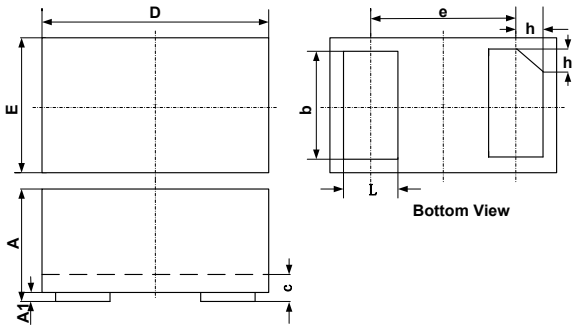

SYM	DIMENSIONS					
	MILLIMETERS			INCHES		
	MIN	NOM	MAX	MIN	NOM	MAX
A	0.45	0.50	0.55	0.018	0.020	0.022
A1	0.00	0.02	0.05	0.000	0.001	0.002
b	0.45	0.50	0.55	0.018	0.020	0.022
c	0.12	0.15	0.18	0.005	0.006	0.007
D	0.95	1.00	1.05	0.037	0.039	0.041
e	0.65 BSC			0.026 BSC		
E	0.55	0.60	0.65	0.022	0.024	0.026
L	0.20	0.25	0.30	0.008	0.010	0.012
h	0.07	0.12	0.17	0.003	0.005	0.007

Suggested Land Pattern

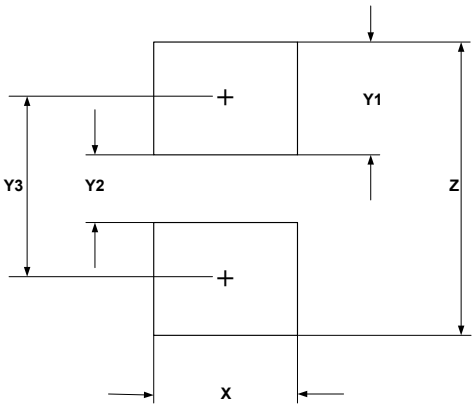

SYM	DIMENSIONS	
	MILLIMETERS	INCHES
X	0.60	0.024
Y1	0.50	0.020
Y2	0.30	0.012
Y3	0.80	0.032
Z	1.30	0.052

NOTICE
Leiditech reserves the right to make modifications,enhancements,improvements,corrections or other changes without further notice to any product herein. Leiditech does not assume any liability arising out of the application or use of any product described herein.

Shanghai Leiditech Electronic Co.,Ltd
Email: sale1@leiditech.com
Tel : +86- 021 50828806
Fax : +86- 021 50477059