# LM-AZ5425-01F

## 1-Line Bi-directional TVS Diode

## Features

- Ultra low leakage: nA level
- Operating voltage: 5V
- Low clamping voltage
- Complies with following standards:
  - – IEC 61000-4-2 (ESD) immunity test
    - Air discharge: ±25kV
    - Contact discharge: ±22kV
  - – IEC61000-4-4 (EFT) 40A (5/50ns)
  - – IEC61000-4-5 (Lightning) 4A (8/20μs)
- RoHS Compliant

## Dimensions DFN1006



## Pin Configuration

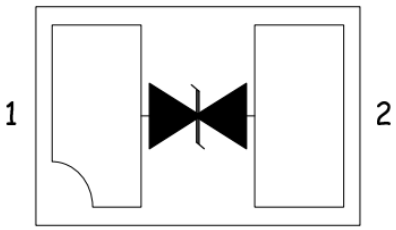


## Applications

- Smart phones
- Display Ports
- MDDI Ports
- USB Ports
- Digital Video Interface (DVI)
- PCI Express and Serial SATA Ports

## Mechanical Characteristics

- Package: DFN1006
- Lead Finish: Lead Free
- Moisture Sensitivity: Level 3 per J-STD-020
- UL Flammability Classification Rating 94V-0
- Quantity Per Reel:10,000pcs
- Reel Size:7 inch
- Device Marking: 24

## Absolute Maximum Ratings(Tamb=25°C unless otherwise specified)

| Parameter | Symbol | Value | Unit |
|---|---|---|---|
| Peak Pulse Power (8/20μs) | Ppp | 100 | W |
| ESD per IEC 61000−4−2 (Air) | $V_{ESD}$ | ± 25 | Kv |
| ESD per IEC 61000−4−2 (Contact) | | ± 22 | |
| Operating Temperature Range | $T_J$ | -55 to +150 | ℃ |
| Storage Temperature Range | $T_{STJ}$ | -55 to +150 | ℃ |

## Electrical Characteristics(TA=25°C unless otherwise specified)

| Parameter | Symbol | Test Condition | Min | Typ | Max | Unit |
|---|---|---|---|---|---|---|
| Reverse Working Voltage | $V_{RWM}$ | | | | 5 | V |
| Breakdown Voltage | $V_{BR}$ | $I_T$ = 1mA | 6.5 | | 9.5 | V |
| Reverse Leakage Current | $I_R$ | $V_{RWM}$ = 5V | | | 1 | μA |
| Clamping Voltage | $V_C$ | $I_{PP}$ = 1A (8 x 20 μs pulse) | | | 12 | V |
| Clamping Voltage | $V_C$ | $I_{PP}$ = 4A (8 x 20 μs pulse) | | | 25 | V |
| Junction Capacitance | $C_J$ | $V_R$ = 0V, f = 1MHz | | 0.3 | | pF |

## Typical Performance Characteristics ($T_A$=25°C unless otherwise Specified)

Fig.1 - Peak Pulse Power Rating

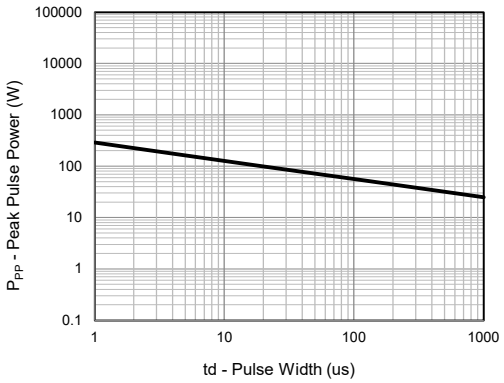


Fig.2 - Pulse Derating Curve

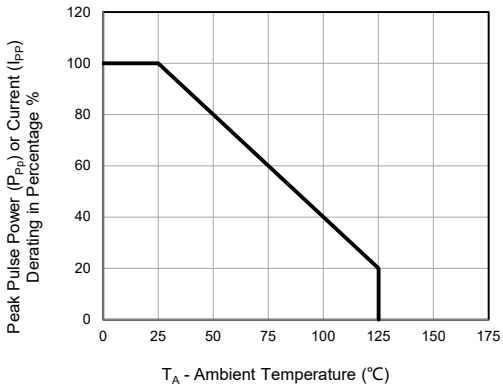


Fig.3 - 8/20us Pulse Waveform

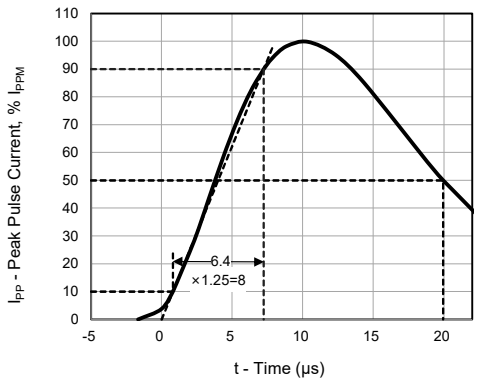


Fig.4 - Typical Clamping Voltage

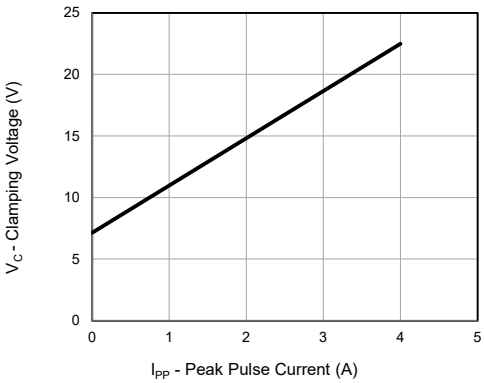


Fig.5 - ESD Pulse Waveform (IEC61000-4-2)

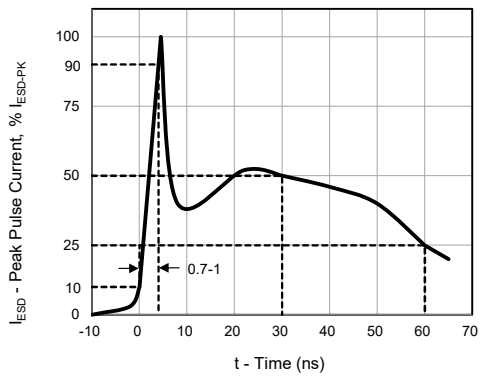


Fig.6 - 5/50ns EFT Waveform (IEC61000-4-4)

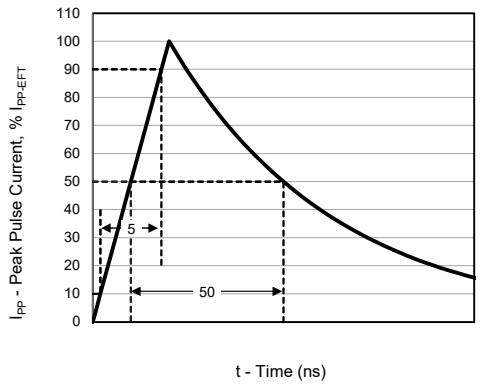

## DFN1006 Package Outline Drawing

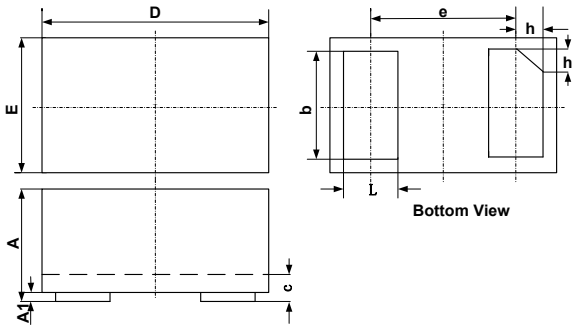


| SYM | DIMENSIONS | | | | | |
|---|---|---|---|---|---|---|
| | MILLIMETERS | | | INCHES | | |
| | MIN | NOM | MAX | MIN | NOM | MAX |
| A | 0.45 | 0.50 | 0.55 | 0.018 | 0.020 | 0.022 |
| A1 | 0.00 | 0.02 | 0.05 | 0.000 | 0.001 | 0.002 |
| b | 0.45 | 0.50 | 0.55 | 0.018 | 0.020 | 0.022 |
| c | 0.12 | 0.15 | 0.18 | 0.005 | 0.006 | 0.007 |
| D | 0.95 | 1.00 | 1.05 | 0.037 | 0.039 | 0.041 |
| e | 0.65 BSC | | | 0.026 BSC | | |
| E | 0.55 | 0.60 | 0.65 | 0.022 | 0.024 | 0.026 |
| L | 0.20 | 0.25 | 0.30 | 0.008 | 0.010 | 0.012 |
| h | 0.07 | 0.12 | 0.17 | 0.003 | 0.005 | 0.007 |

## Suggested Land Pattern

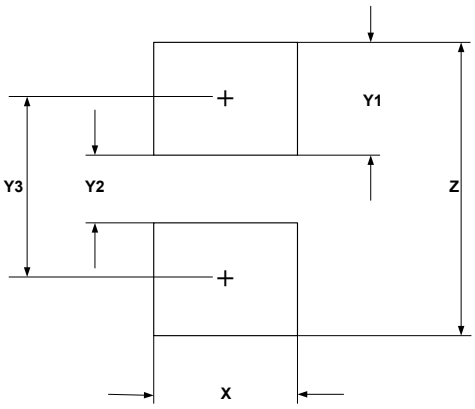


| SYM | DIMENSIONS | |
|---|---|---|
| | MILLIMETERS | INCHES |
| X | 0.60 | 0.024 |
| Y1 | 0.50 | 0.020 |
| Y2 | 0.30 | 0.012 |
| Y3 | 0.80 | 0.032 |
| Z | 1.30 | 0.052 |

NOTICE
Leiditech reserves the right to make modifications,enhancements,improvements,corrections or other changes without further notice to any product herein. Leiditech does not assume any liability arising out of the application or use of any product described herein.

Shanghai Leiditech Electronic Co.,Ltd
Email: sale1@leiditech.com
Tel : +86- 021 50828806
Fax : +86- 021 50477059