KNSCHA
Empowering The World

广东科尼盛电子科技有限公司
KNSCHA ELECTRONICS CO., LIMITED

规格承认书

Specification For Approval

客户名称: (Customer Name)	
产品名称: (Product Name)	电解电容 Aluminum Electrolytic Capacitor
客户料号: (Customer part number)	
科尼盛料号: (KNSCHA number)	DHC400M107L304S1AA
型号规格: (Specifications)	E/C 400V/100μF 13*30mm 105℃ KNSCHA SHC 2000H P:5.0mm ±20% 黑体白字
日期: DATE	2025.7.14

制 造 Manufacture	
核 准 APPROVAL	制 作 PREPARED
王师	陆美秀

客户承认栏 CUSTOMER APPROVED		
核 准 APPROVED	确 认 CHECKED	经 办 DESIGNED

广东科尼盛电子科技有限公司

KNSCHA ELECTRONICS CO.,LIMITED.

No. 8th floor, A3 building, R&D center (Phase I),

Songshan Lake Intelligent Valley, Liaobu Town, Dongguan City.

TEL:0769-83698067 81035570 FAX: 0769-83861559

Email: sales@knscha.com Website: http://www.knscha.com

广东科尼盛电子科技有限公司
KNSCHA ELECTRONICS CO.,LIMITED

一、部品规格特征表

NO	Series	CAP (μF)	WV (V.DC)	Size (mm)	CAP %	Operating Temperature Range（℃）	DF% (120Hz 20℃)	LC (2min) (uA)	Max Ripple Curent (mA@105℃ /120HZ)	寿命（H）	备注
1	SHC	100	400	13*30	±20	-40～105	20	400	550	2000	
2											
3											

注明：无卤产品

1. 适用标准(TEST STANDARD):

JIS C 5141 - 1991 电子机器用固定非固体电解质电解电容器

JIS C 5102 电子机器用固定电容器试验方法

GB 5993-91 电子设备用固定电容器 第四部分：分规范：固体和非固体电解质铝电容器

2. 适用范围（Adapt Range）：

本产品规格书适用于广东科尼盛电子科技有限公司铝电解电容器。

This product specification is adapted to Aluminum Electrolytic Capacitors produced by KNSCHA ELECTRONICS CO.,LIMITED.

3. 使用温度范围(Operating Temperature Range):

6.3～100WV：-40～+105℃ 160～450WV：-25～+105℃

4. 浪涌电压(Surge Voltage):

工作电压（V） Rated voltage	6.3	10	16	25	35	50	63	100	160	200	250	350	400	450
浪涌电压（V） Surge voltage	8	13	20	32	44	63	79	125	200	250	300	400	450	500

5. 损耗(Dissipation Factor): (25℃,120Hz)

工作电压（V） Rated voltage	6.3	10	16	25	35	50	63	100	160	200	250	350	400	450
损耗角正切值 D.F.(Tan%) Max	22	20	16	14	12	10	9	8	12	12	12	15	20	20

注：当标准容量每大于1000μF时，每增加1000μF损失角正切值相应增加2%。

6. 漏电流(DC Leakage Current）

施加额定电压2分钟后测试 (After 2 minutes application of rated working voltage)

6.3～100WV I≤0.01CV 或3.0(μA）,（at 25℃)

160～450WV I≤0.03CV(μA）,（at 25℃)

7. 胶管标识示意图(Marking):

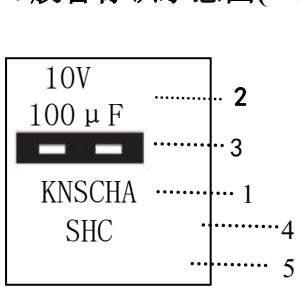

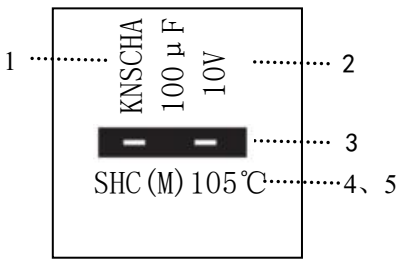

ΦD≤13mm **ΦD≥16mm**

NO. 代表内容 Item

1 科尼盛公司商标(Logo)

2 电容器规格（额定电压和容量）Capacitance and Rated Vlotage

3 负极表示带 Polarity bar

4 产品系列(Series)

5 容量范围与工作最高温度(Capacitance Tolerance and Operating Temperature Range)

8. 外形图（Dimensions）：

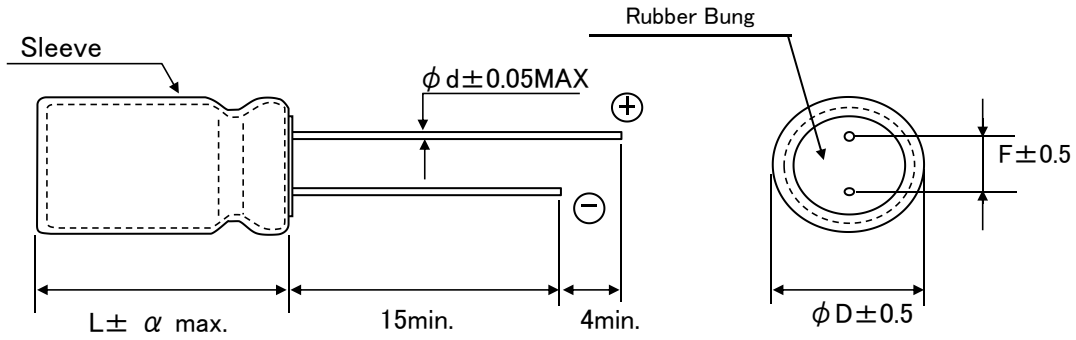

ΦD	F	α	Φd
5	2	1.5	0.5
6.3	2.5	1.5	0.5
8	3.5	1.5	0.5
10	5	1.5	0.6
13	5	1.5	0.6
16	7.5	2	0.8
18	7.5	2	0.8
20	10	2	1.0

注：长脚

9. 纹波电流系数（Multiplier for ripple current）：

频率系数 Frequency Coefficents

Frequency (HZ) / CAP(μF)	50	120	300	1K	10K	100K
CAP≦10	0.65	1	1.35	1.75	2.3	2.5
10≦CAP≦100	0.75	1	1.25	1.5	1.75	1.8
100≦CAP≦1000	0.8	1	1.15	1.3	1.4	1.5
1000<CAP	0.85	1	1.03	1.05	1.08	1.08

温度系数 temperature coefficients

Temperature(°C)	≤50	65	75	85	95	105
Multiplier	1.9	1.75	1.57	1.4	1.2	1.0

10. 构造图及材料表（Frame drawing and Material list):

10.1、构造图(Frame drawing)

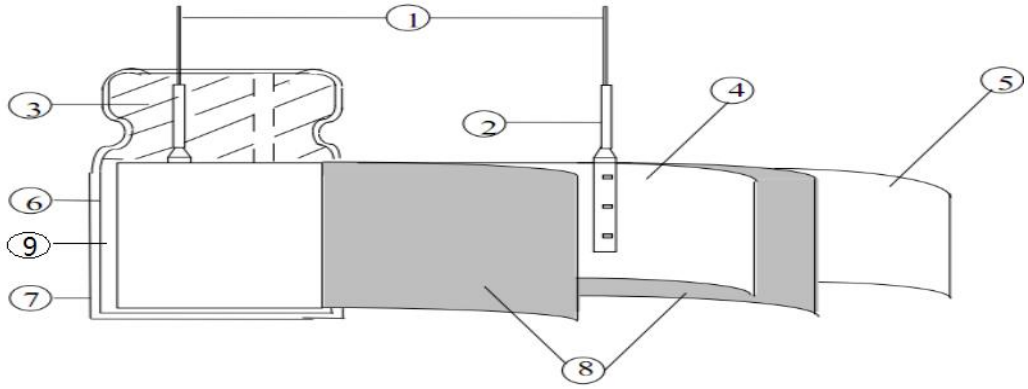

10.2、材料表（Material table)

NO.	构成部件 Component	材质 Material	备注 Remarks
1	引出线 Lead line	铝+CP线 Aluminum + Cpwire	
2	端子 Terminal	铝 Aluminum wire	
3	胶塞 Rubber	合成橡胶 Synthetic rubber	
4	正极箔 Al Foil(+)	铝 Aluminum	
5	负极箔 Al Foil(-)	铝 Aluminum	
6	铝壳 Case	铝 Aluminum case	
7	套管 Sleeve	PET	
8	电解纸 Separator	电解电容器纸 Electrolytic capacitors paper	
9	工作电解液 Working electrolyte	乙二醇等 Ethanediol	

NO	项 目 Items	条 件 Conditions	规 格 Specifications
11.1	最大允许纹波电流 Maximum permissible ripple current	温度 Temperature：105±2℃ 纹波:120Hz正弦交流实际电流值+交流电压峰值≤标准电压 Ripple frequency: The maximum sinusoidal alternating current of a freequency specified below at whith the capacitor can be operated continuously,Where DC.Voltage+peak ripple voltage≤Rated voltage.	Refer to table
11.2	浪涌电压 Surge Voltage	在下面规定的温度下，通过指定的浪涌电压，6.0分钟（充电30秒，放电5分30秒）为一循环，往返1000回合，常温常湿下放置1-2小时达到热平衡状态测定满足。 The capacitor shall be subjected to 1000 cycles at a temperatu specified below,each consisting of a charge period of 30±5s, followed by a discharge period of approx 5min.30s.And the capacitor shall be stored 1-2hours under standard atmospheric conditions to obtain thermal stability,after which measurement shall be made. 应加电压：见4项 Test voltage:see 4 温度：15～30℃ Test Temperature:15～30℃ 测试回路 Measurement circuit 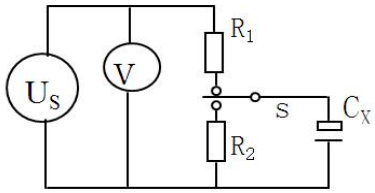 R1:串联保护电阻（1KΩ） Protective series resistor(1kΩ) V:直流电压表 DC Voltage R2:放电电阻 Discharge resister(1KΩ) S:切换开关 Switch Cx:待测电容器 Test Capacitor	漏电流：不超过规定值 Leakage Current: Not more than the specified value 容量变化：初始值的±15%以内 Capacitance change:Within ±15% of theinitial valueinitial value. 损失角：不超过规定值
11.3	静电容量 （允许偏差） Capacitance (Tolerance)	测试频率：120Hz Measuring frequency:120Hz 测试电压：0.5Vrms or less measuring voltage:0.5Vrms or less DC bias voltage:+1.5～2.0 V DC	静电容量允许偏差，+20%-20%Capacitance tolerance+20%-20%
11.4	**损耗角正切值（tgδ） Tangant of angle**	测试条件与静电容量相同 Measurement shall be made under the same conditions as those given for the measurement of capacitance	见5项 Refer to table 5.

NO	项 目 Items	条 件 Conditions	规 格 Specifications
11.5	漏电流 Leakage Current	电容器接1000±10Ω.的保护电阻施加电压1分钟后的测试电流。 The rated voltage shall be applied across the capacitor and its protective resistor which shall be 1000±10Ω.The leakage Current shall then be measured after an electricantion period of 1min.The leakage current shall be calculated by the following equation. 漏电流：（I）=E/Rs Leakage current: E:直流电压表的电压值 Voltage measured with DC voltmeter Rs:标准电阻的电阻值 Resistance of the protective resistor 测定电路 measurement circuit 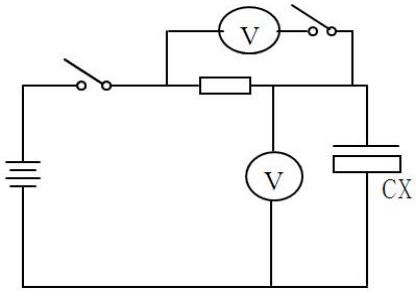 电压将下法 (voltage drop method) Rs:标准电阻的电阻值（1000±100Ω） protective resistor 直流电压表或电子电压表 DC voltmeter or electronic voltmeter S1:开关 switch S2:电压表保护用变换开关 protective switch for a voltmeter CX:待测电容器 test capacitor	见6项 Refer to table 6.

<table>
<tr><th>NO</th><th>项 目
Items</th><th>条 件
Conditions</th></tr>
<tr><td>11.6</td><td>高低温特性
Characteristic at High and low temperature</td><td>
电容器根据下表的次序处理
The capacitor shall subjected in turn to the procedures specified below.
<table>
<tr><th>阶 段
Step</th><th>温 度
Temperature</th><th>时 间
Times</th></tr>
<tr><td>1</td><td>20±2℃</td><td>热平衡状态</td></tr>
<tr><td>2</td><td>-40(-25)℃</td><td>*2hours</td></tr>
<tr><td>3</td><td>20±2℃</td><td>热平衡状态</td></tr>
<tr><td>4</td><td>105℃</td><td>*2hours</td></tr>
<tr><td>5</td><td>20±2℃</td><td>热平衡状态</td></tr>
</table>
* 电容器放置在每一温度下，待阻抗或电容量稳定后方可测试。
* The capacitor should be stored at rech temperature until measured temperature impedance or capacitance are stabilized.
<table>
<tr><td rowspan="2">阶段2
Step2</td><td>阻抗比（对阶段1）
Impedance ratio</td><td>见9.10项
refer to No9.10</td></tr>
<tr><td>静电容量变化率
（对阶段1）
change in capacitance</td><td>静电-20～+20%
within-20～+20%</td></tr>
<tr><td rowspan="2">阶段4
Step4</td><td>静电容量变化率
（对阶段1）
change in capacitance</td><td>静电-20～+20%
within-20～+20% of step 1</td></tr>
<tr><td>漏电流
Leakage Current</td><td>规定值5倍以下
Less than 500% of the specified value</td></tr>
</table>
阶段1：测定容量，损耗和阻抗值。
Step1:Capacitance,Dissipation Factor and impedance shall be measured.
阶段2：放置2小时后，达到热平衡状态再测。
Step2:After the capacitor being stored for 2 hours,capacitance, Dissipation Factor and impedance shall be Measured.The measurement shall be made at thermal stability.
阶段4：放置2小时后，达到热平衡状态测测。
Setp4:After the capacitor being stored for 2 hours,Capacitance, Dissipation Factor and impedance shall be Measured.The measurement shall be made at thermal stability.
</td></tr>
</table>

<table>
<tr><th>NO</th><th>项 目
Items</th><th>条 件
Conditions</th><th>规格
Specifications</th></tr>
<tr><td>11.7</td><td>压力释放
Pressure relief</td><td>一、交流试验 A.C.test
施加电压值：Applied voltage
交流电压不超过0.7倍的额定直流电压或250VAC以下
A.C.voltage not exceeding 0.7times the rated
Direct voltage or 250V AC whichever is
the lower.
频率：Frequency:50Hz或60Hz
串联电阻参照下表 Series resistor refer to
the table below.
<table><tr><th>Capacitance</th><th>Series resistor</th></tr><tr><td>C≤1μF</td><td>1000±100Ω</td></tr><tr><td>1μF＜C≤10μF</td><td>100±10Ω</td></tr><tr><td>10μF＜C≤100μF</td><td>10±1Ω</td></tr><tr><td>100μF＜C≤1000μF</td><td>1±0.1Ω</td></tr><tr><td>1000μF＜C≤10000μF</td><td>0.1±0.01Ω</td></tr><tr><td>10000μF＜C</td><td>/</td></tr></table>*电阻相当于试验频率阻抗的1/2
Resistance is equivalent to a half of
Impedance by test frequency.
二、直流试验 D.C.test
施加同额定电压相等的反向电压。
Reversed polarity D.C.rated voltage shall
be applied to the capacitor.
注：1、该规定适用于铝壳直径6mm以上的电容器。
2、试验开始30Min后。防爆装置不动作时，
停止试验。
Note:
1.This requirement applies to capacitors
with a diameter of 6mm or more.
2.When the pressure relief device dose
not open even 30minutes after commencement
of this test,the test may be ended.</td><td>防爆装置打开时，无 燃烧、无爆炸或铝壳 和封口材料的分离。
The pressure relief device shall open in such a way as to avoid any danger of fire or explosion of Capacitor elements.</td></tr>
</table>

NO	项 目 Items	条 件 Conditions	规 格 Specifications
11.8	高温负荷 Lord life	在105±2℃的恒温箱内，电容器施加最大允许纹波电流，施加直流电压和交流电压的峰值的和要等于额定电压，时间 2000 +24 小时，试验结束后，在标准状态下放置16小时候进行测试。 The capacitor shall be placed in a circulating air oven at an ambient temperature of 105±2℃. It must not be subjected to direct radiation from herting elements.DC voltage and the rated ripple current shown in table shall be applied for a period of 2000 +24 hours,The sum of the DC voltage and peak AC voltage must not exceed the full rated voltage of the capacitor.It shall be subjected to standard atmospheric for 16 hours, after which measurement shall be made.	漏电流：不超过规定值 Leakage current:≤ Initial specified value 容量变化率：初测值的±20%以内 Capacitance change: within±20% of Initial value 损耗角正切：不超过规定值的2倍 Dissipation factor: ≤200% of initial specified value
11.9	高温储存 Shelf life	温度 Temp: 105±2℃ 时间 Time:1000+36小时 电压处理：在常温下电容器串联保护电阻（1KΩ），加额定施加额定电压30分鐘後在放電,常温放置24-48小时后测量 Condition: The DC rated voltage shall be applied across the capacitor and its protective. resistor (1kΩ) for 1 minutes,The capacitor shall then be stored under standard Atmospheric Conditions for 24-48 hours. 漏电流：施加额定电压一分钟,常溫下测試,I≤2倍的规定值. Leakage current: rated voltage for one minute I≦applied the provisions of twice the value of	漏电流：施加额定电压一分 钟I≦2倍的规定值. 容量变化率：初测值的±20%以内 Capacitance change: within±20% of Initial value 损耗角正切：不超过规定值的2倍 Dissipation factor: ≤200% of initial specified value
11.10	可焊性 Solderability	浸 渍 时 间 Solder presstime: 2±0.5s 焊 接 温 度 Solder temperature: 235±5℃	浸渍面积90%以上附着 At least90%of Circumferential surface of the dipped portion of termination shall be covered with new solder

NO	项 目 Items	条 件 Conditions	规 格 Specifications
11.11	耐焊接热 Resistance to soldering heat	温度：350±10℃ Test Temperature:350±10℃ 时间：3.5±0.5s Test time:3.5±0.5s	漏电流：不超过规定值 Leakage current: Not more than the specified value 电容量变化：初测值的±10%以内 Capacitance Change : within±10% of the initial value 损耗角正切：不超过规定值 Dissipation Factor: Not More than the specified value 外观：无明显异常 Appearance: No remarkable abnormality
11.12	耐湿性 Resistance of dump heat	温度：40±2℃ Test Temperature:40±2℃ 湿度：90-95%Rh Relative Hwmidity:90-95%Rh 时间：240±8hrs Test time:240±8hrs 试验后常温放置24-48小时 To expose in the atmospheric condition for 24to 48 hours after completion of test	漏电流：不超过规定值 Leakage current: Not more than the specified value 电容量变化：初测值的±10%以内 Capacitance Change : within±10% of the initial value 损耗角正切：不超过规定值 Dissipation Factor: Not More than the specified value 外观：无明显异常 Appearance: No remarkable abnormality
11.13	耐振性 Resistance to vibration	频率：10-55-10Hz/分 Frequency: From 10 to 55 Hz and return to 10 Hz,shall be transferred in 1 Min Total Amplitude:1.5mm 条件：X.Y.Z 方向各2小时 Direction and duration of vibration：3 orthogonal directions mutually each for 2 hours Total 6 hours. 静电容量变化：初始值的±5%以内 Capacitance change: Within ±5% of the initial value	静电容量测试时无接触不良，断线及短路，端子无机械损伤。 Capacitance:During the test,measured value to be stabilized(when measured several times within 30 min before completion of test) Appearance:No remarkable abnormality 外观：无明显异常 Appearance: No remarkable abnormality

<table>
<tr><th>NO</th><th>项 目
Items</th><th>条 件
Conditions</th><th>规 格
Specifications</th></tr>
<tr><td>11.14</td><td>耐溶剂性
Resisting Solvent</td><td>溶剂：异丙醇
Solvent:Isopropylalcohol
温度：20-25℃
Temperature:20-25℃
时间：30±5s
Time:30±5s</td><td>外观：无明显异常
Appearance: No remarkable abnormality</td></tr>
<tr><td>11.15</td><td>端子强度
Terminal Strength
拉伸度
Tensile test intensity
弯曲强度
winding intensity</td><td>
<table>
<tr><td>线径
Diameter of terminnal (mm)</td><td>拉伸力
Tensile Strength (N)</td><td>维持时间
continued time</td></tr>
<tr><td>0.3＜d≤0.5</td><td>5</td><td rowspan="3">10±1sec</td></tr>
<tr><td>0.5＜d≤0.8</td><td>10</td></tr>
<tr><td>0.5＜d≤1.25</td><td>20</td></tr>
<tr><td colspan="3">2回合 2bends</td></tr>
<tr><td>线径
Diameter of terminnal (mm)</td><td>弯曲力
Tensile Strength (N)</td><td>锥质量
Awl quality</td></tr>
<tr><td>0.3＜d≤0.5</td><td>2.5</td><td>0.75kg</td></tr>
<tr><td>0.5＜d≤0.8</td><td>5</td><td>0.51kg</td></tr>
<tr><td>0.5＜d≤1.25</td><td>10</td><td>1.0kg</td></tr>
</table>
</td><td>测定静电容量时，无接触不良，开路和短路现象，另外无机械损伤和端子损伤。
When the capacitance is measured,there shall be no intermittent contacts or open-or short-circuiting.
There shall be no such mechanical damage as termin</td></tr>
</table>