1117C

1A Bipolar Linear Regulator

Features

- Maximum output current is 1A
- Range of operation input voltage: Max 15V
- Line regulation: 0.03%/V (typ.)
- Standby current: 2mA (typ.)
- Load regulation: 0.2%/A (typ.)
- Environment Temperature: -40℃~125℃

Applications

- Power Management for Computer Mother Board, Graphic Card
- LCD Monitor and LCD TV
- DVD Decode Board
- ADSL Modem
- Post Regulators for Switching Supplies

General Description

1117C is a series of low dropout three-terminal regulators with a dropout of 1.3V at 1A load current.

1117C features a very low standby current 2mA compared to 5mA of competitor.

Other than a fixed version, Vout = 1.2V, 1.8V, 2.5V, 2.85V, 3.3V, and 5V, 1117C has an adjustable version, which can provide an output voltage from 1.25 to 12V with only two external resistors.

1117C offers thermal shut down function, to assure the stability of chip and power system. And it uses trimming technique to guarantee output voltage accuracy within 2%. Other output voltage accuracy can be customized on demand, such as 1%.

1117C is available in SOT -223, TO-252 packages.

Typical Application

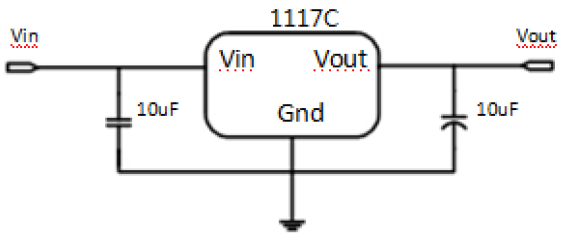

Application circuit of 1117C fixed version

Selection Table

Part No.	Symbol.	Output Voltage	Package	Marking
1117C	XX=12	1.2V	SOT-223 TO-252	1117C XX SSWW
	XX=18	1.8V		
	XX=25	2.5V		
	XX=33	3.3V		
	XX=50	5.0V		
	XX=ADJ	Adj		

Note: 1. "XX" stands for output voltage,

2. "SSWW" stands for order number and Data Code.

Ordering Information

Part No.	Package Type	Packing type
1117C -XXV	SOT223	2500 Tape&Reel
1117C -XXTR	TO252	2500 Tape&Reel

Note:"XX" stands for output voltages.

Block Diagram

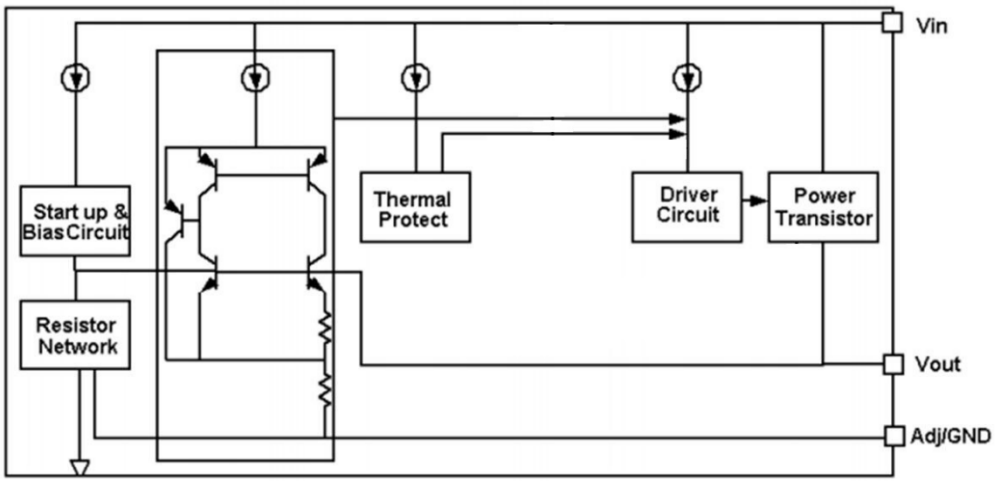

Pin Configuration

SOT223 (Top View)

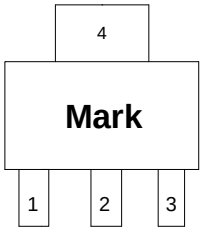

Table1: 1117C series (SOT223 PKG)

PIN NO.	PIN NAME	FUNCTION
1	VSS/ADJ	VSS/ADJ pin
2	VOUT	Output voltage pin
3	VIN	Input voltage pin
4	VOUT	Output voltage pin

TO252 (Top View)

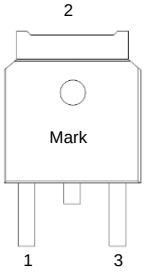

Table2: 1117C-XXTR series (TO252 PKG)

PIN NO.	PIN NAME	FUNCTION
1	VSS/ADJ	VSS/ADJ pin
2	VOUT	Output voltage pin
3	VIN	Input voltage pin

Absolute Maximum Ratings

Max Input Voltage ····· ····· ····· ··18V
Max Operating Junction Temperature(Tj) ····· ····· ····· ··150℃
Storage Temperature(Ts)····· ····· ····· ···-55℃~150℃
Lead Temperature & Time····· ····· ····· ··260℃ 10S
Caution: Exceed these limits to damage to the device. Exposure to absolute maximum rating conditions may affect device reliability.

Electrical Characteristics

T_A=25℃, unless otherwise noted.

Symbol	Parameter	Conditions	Min	Typ	Max	Unit
Vref	Reference voltage	1117C -Adj 10mA≤Iout≤1A , Vin=3.25V	1.225	1.25	1.275	V
Vout	Output voltage	1117C -1.2V 0≤Iout≤1A , Vin=3.2V	1.176	1.2	1.224	V
		1117C -1.8V 0≤Iout≤1A , Vin=3.8V	1.764	1.8	1.836	V
		1117C-2.5V 0≤Iout≤1A , Vin=4.5V	2.45	2.5	2.55	V
		1117C -3.3V 0≤Iout≤1A , Vin=5.3V	3.234	3.3	3.366	V
		1117C -5.0V 0≤Iout≤1A , Vin=7.0V	4.9	5.0	5.1	V
△Vout	Line regulation	1117C -1.2V Iout=10mA, 2.7V≤Vin≤10V		4	20	mV
		1117C -ADJ Iout=10mA, 2.75V≤Vin≤12V		5	30	mV
		1117C -1.8V Iout=10mA, 3.3V≤Vin≤12V		5	40	mV
		1117C -2.5V Iout=10mA, 4.0V≤Vin≤12V		8	50	mV
		1117C -3.3V Iout=10mA, 4.8V≤Vin≤12V		9	60	mV
		1117C -5.0V Iout=10mA, 6.5V≤Vin≤12V		10	70	mV
		1117C -1.2V		2	24	mV

△Vout	Load regulation	Vin =2.7V, 10mA≤Iout≤1A				
		1117C -ADJ Vin =2.75V, 10mA≤Iout≤1A		2	25	mV
		1117C -1.8V Vin =3.3V, 10mA≤Iout≤1A		3	36	mV
		1117C -2.5V Vin =4.0V, 10mA≤Iout≤1A		4	50	mV
		1117C -3.3 Vin =4.8V, 10mA≤Iout≤1A		6	66	mV
		1117C-5.0 Vin =6.5V, 10mA≤Iout≤1A		9	100	mV
Vdrop	Dropout voltage	Iout =100mA		1.2	1.3	V
		Iout=1A		1.3	1.5	V
Imin	Minimum load current	1117C -ADJ		2	10	mA
Iq	Quiescent Current	1117C -1.2V, Vin=10V		2	5	mA
		1117C -1.8V, Vin=12V		2	5	mA
		1117C -2.5V, Vin=12V		2	5	mA
		1117C -3.3V, Vin=12V		2	5	mA
		1117C -5.0V, Vin=12V		2	5	mA
IAdj	Adjust pin current	1117C -ADJ Vin=5V,10mA≤Iout≤1A		55	120	uA
Ichange	Iadj change	1117C -ADJ Vin=5V,10mA≤Iout≤1A		0.2	10	uA
△V/△T	Temperature coefficien			±100		ppm
θ_{JC}	Thermal resistance	SOT-223		20		℃/W
		TO-252		10		

Note1: All test are conducted under ambient temperature 25° C and within a short period of time 20ms

Note2: Load current smaller than minimum load current of 1117C -ADJ will lead to unstable or oscillation output.

Detailed Description

1117C is a series of low dropout voltage, three terminal regulators. Its application circuit is very simple: the fixed version only needs two capacitors and the adjustable version only needs two resistors and two capacitors to work. It is composed of some modules including start-up circuit, bias circuit, bandgap, thermal shutdown, power transistors and its driver circuit and so on.

The bandgap module provides stable reference voltage, whose temperature coefficient is compensated by careful design considerations. The temperature coefficient is under 100 ppm/°C. And the accuracy of output voltage is guaranteed by trimming technique.

Typical Application

1117C has an adjustable version and six fixed versions (1.2V, 1.8V, 2.5V, 3.3V and 5V)

Fixed Output Voltage Version

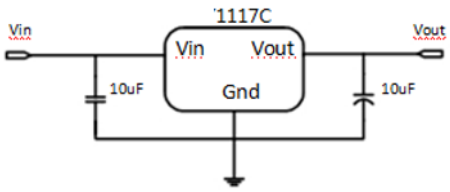

Application circuit of 1117C fixed version

1) Recommend using 10uF tan capacitor as bypass capacitor (C1) for all application circuit.
2) Recommend using 10uF tan capacitor to assure circuit stability.

Adjustable Output Voltage Version

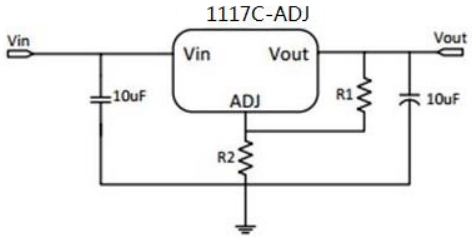

Application Circuit of 1117C -ADJ

The output voltage of adjustable version follows the equation: Vout=1.25×(1+R2/R1)+IAdj×R2. We can ignore IAdj because IAdj (about 50uA) is much less than the current of R1 (about 2~10mA).

1) To meet the minimum load current (>10mA) requirement, R1 is recommended to be 125ohm or lower. As 1117C -ADJ can keep itself stable at load current about 2mA, R1 is not allowed to be higher than 625ohm.

2) Using a bypass capacitor (C_{ADJ}) between the ADJ pin and ground can improve ripple rejection. This bypass capacitor prevents ripple from being amplified as the output voltage is increased. The impedance of C_{ADJ} should be less than R1 to prevent ripple from being amplified. As R1 is normally in the range of 100Ω~500Ω, the value of C_{ADJ} should satisfy this equation: $1/(2\pi \times f_{ripple} \times C_{ADJ})<R1$.

Thermal Considerations

We have to take heat dissipation into great consideration when output current or differential voltage of input and output voltage is large. Because in such cases, the power dissipation consumed by 1117C is very large. 1117C series uses SOT-223 package type and its thermal resistance is about 20°C/W. And the copper area of application board can affect the total thermal resistance. If copper area is 5cm*5cm (two sides), the resistance is about 30°C/W. So the total thermal resistance is about 20°C/W + 30°C/W. We can decrease total thermal resistance by increasing copper area in application board. When there is no good heat dissipation copper are in PCB, the total thermal resistance will be as high as 120°C/W, then the power dissipation of 1117C could allow on itself is less than 1W. And furthermore, 1117C will work at junction temperature higher than 125°C under such condition and no lifetime is guaranteed.

Typical Performance Charcteristics

T_A=25℃, unless otherwise noted.

Line regulation

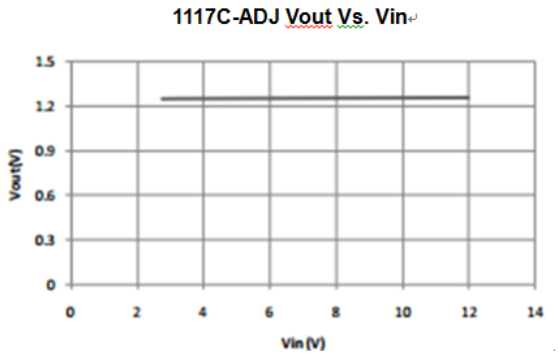

Load regulation

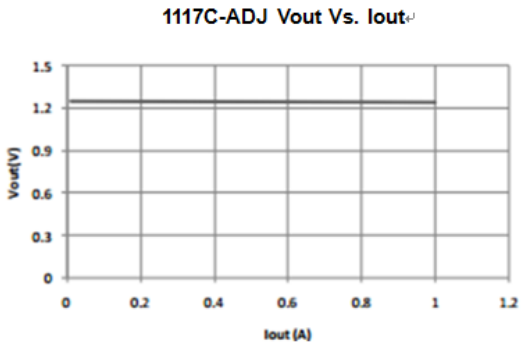

Dropout voltage

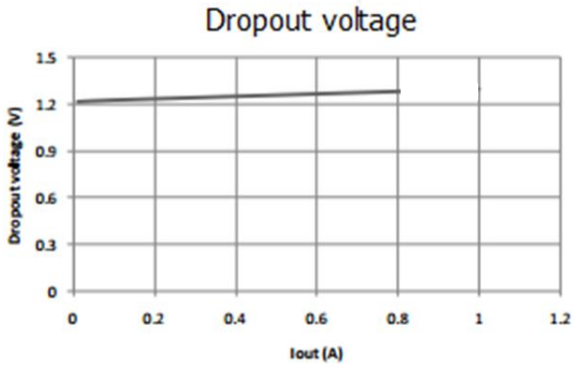

Thermal performance with OTP

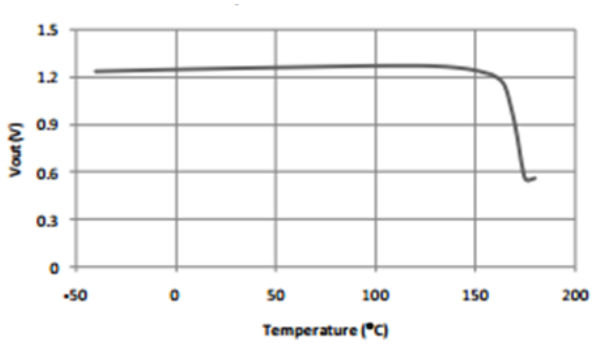

Package Information

SOT-223 PACKAGE OUTLINE DIMENSIONS

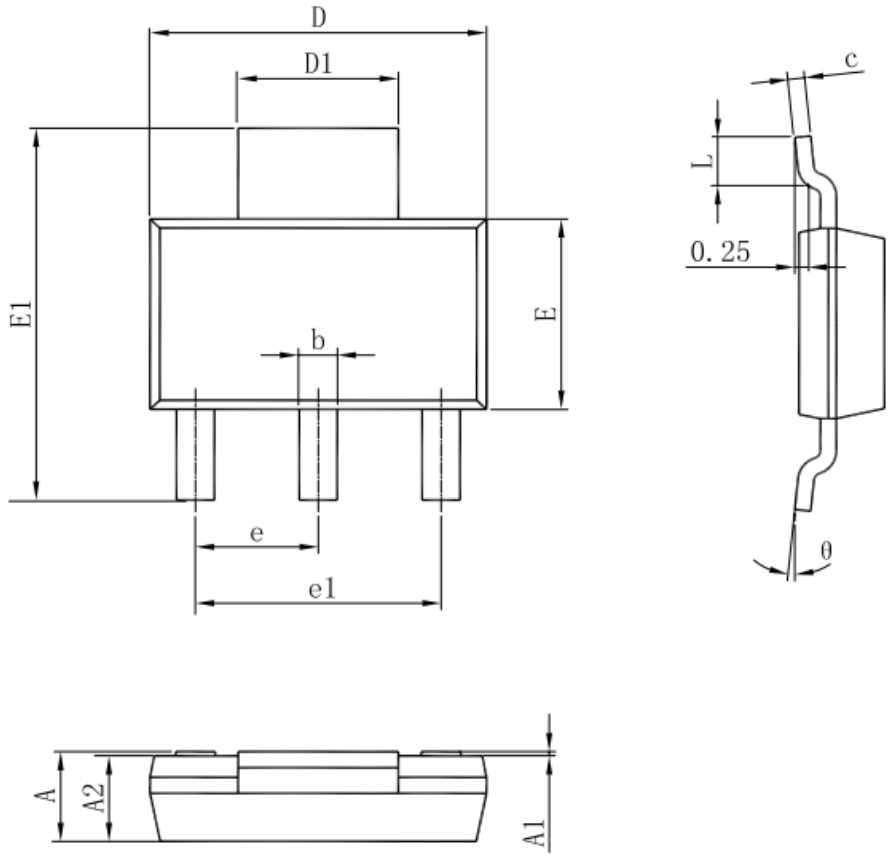

Symbol	Dimensions In Millimeters		Dimensions In Inches	
	Min	Max	Min	Max
A	1.520	1.800	0.060	0.071
A1	0.000	0.100	0.000	0.004
A2	1.500	1.700	0.059	0.067
b	0.660	0.820	0.026	0.032
c	0.250	0.350	0.010	0.014
D	6.200	6.400	0.244	0.252
D1	2.900	3.100	0.114	0.122
E	3.300	3.700	0.130	0.146
E1	6.830	7.070	0.269	0.278
e	2.300(BSC)		0.091(BSC)	
e1	4.500	4.700	0.177	0.185
L	0.900	1.150	0.035	0.045
θ	0°	10°	0°	10°

TO-252-2L PACKAGE OUTLINE DIMENSIONS

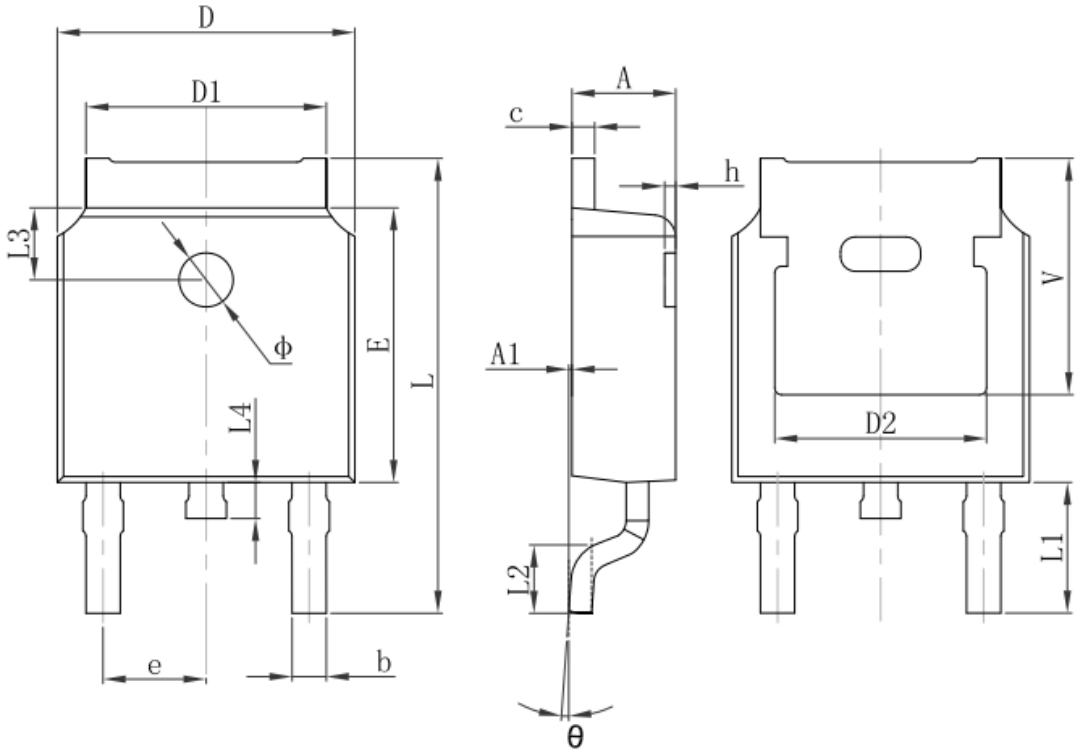

Symbol	Dimensions In Millimeters		Dimensions In Inches	
	Min.	Max.	Min.	Max.
A	2.200	2.400	0.087	0.094
A1	0.000	0.127	0.000	0.005
b	0.660	0.860	0.026	0.034
c	0.460	0.580	0.018	0.023
D	6.500	6.700	0.256	0.264
D1	5.100	5.460	0.201	0.215
D2	4.830 REF.		0.190 REF.	
E	6.000	6.200	0.236	0.244
e	2.186	2.386	0.086	0.094
L	9.800	10.400	0.386	0.409
L1	2.900 REF.		0.114 REF.	
L2	1.400	1.700	0.055	0.067
L3	1.600 REF.		0.063 REF.	
L4	0.600	1.000	0.024	0.039
Φ	1.100	1.300	0.043	0.051
θ	0°	8°	0°	8°
h	0.000	0.300	0.000	0.012
V	5.350 REF.		0.211 REF.	