CAN Isolated Transceiver

TDXX485-A

Medical electric equipment | Power Factor Correction | World wide | Safety Approvals | EMI | Inrush current limiting | OCP | OVP | Remote ON/OFF | Parallel Operation | 1U

TD-series

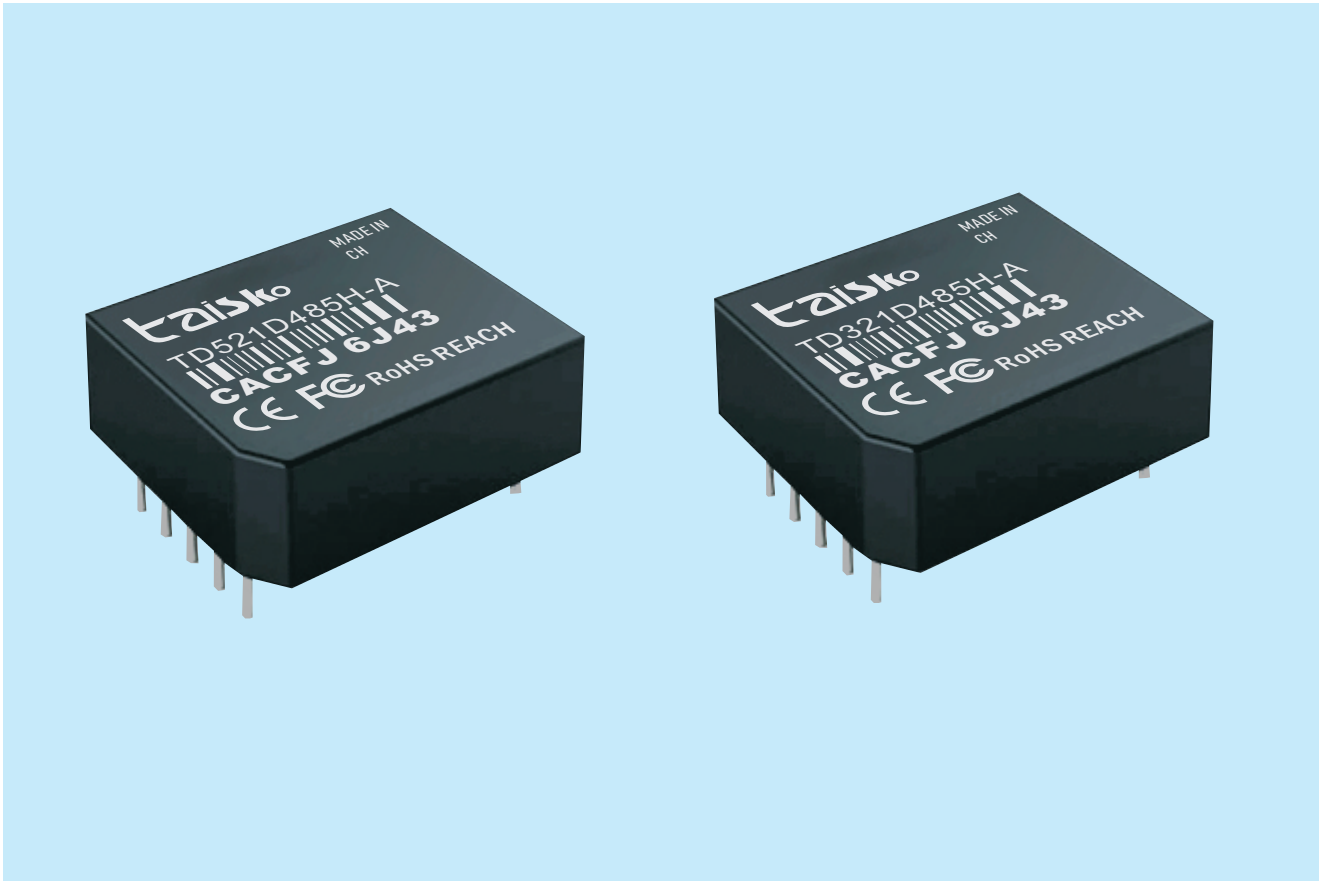

Feature

RS485 isolated transceiver
It is an integrated transceiver chip
Isolation chip and DC/DC
Integrated isolated power supply
The interface isolation transceiver module
Can completely replace tradition
The optocoupler isolation scheme
In the past, we needed to send and receive chips
Isolation chip/optocoupler
Only by isolating the power supply can it be achieved
The entire isolation and transmission plan
Now we only need to collect
Using an RS485
Isolation transceiver module
It can be easily achieved
Greatly simplified the customer's design.

Safety agency approval

ENI 55032:2015/A1:2020
EN IEC 62368-1:2020+A11:2020
IEC 62321-1:2013IEC 62321-2:2021IEC 62321-3-1:2013,

Up to 5-year warranty (Refer to Instruction Manual)

CE FCC marking

Low Voltage Directive
RoHS Directive

ROHS REACH marking

Electrical Equipment Safety Regulations
RoHS Regulations

EMI

・PCA300F, PCA600F
Complies with FCC-B, CISPR32-B, EN55011-B, EN55032-B, VCCI-B
・PCA1000F, PCA1500F
Complies with FCC-A, CISPR32-A, EN55011-A, EN55032-A, VCCI-A

EMS Compliance : EN61204-3, EN61000-6-2 IEC60601-1-2 (2014), EN60601-1-2 (2015)

EN61000-4-2
EN61000-4-3
EN61000-4-4
EN61000-4-5
EN61000-4-6
EN61000-4-8
EN61000-4-11

TDXX485-A

Automatic transmission and reception **isolation** RS-485 **transceiver**

1 Product features:

- Single input power supply
- Equipped with isolated output power pins
- Automatic data transmission and reception function
- Up to 128 nodes can be connected
- Electromagnetic radiation EMI is extremely low
- Working temperature range: -40 ℃ to+85 ℃
- Integrated power isolation, signal isolation, and bus ESD protection functions

2 Product Description:

TD321D485H-A / TD521D485H-A， The main function will be to convert logical levels into differential levels of RS-485 protocol, achieving signal isolation; It is an RS-485 protocol transceiver module that uses IC integration technology to achieve power isolation, signal isolation, RS-485 communication, and bus protection. The product comes with a constant voltage isolation power supply, which can achieve 2500VDC electrical isolation. The product has automatic switching of transmission and reception functions, eliminating the need for transmission and reception control through control pins, which reduces the complexity of the design to a certain extent. The product can be easily embedded into user devices, enabling them to easily connect to RS485 protocol networks.

3 Scope of application:

Industrial communication, coal mining industry, power monitoring, building automation ..

4 Appearance dimensions and pin specifications:

4.1 Appearance dimension diagram

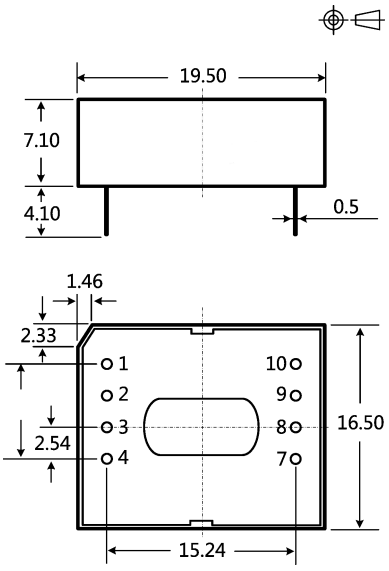

Note:

Dimension unit: mm

Terminal diameter tolerance: ± 0.10
Unmarked tolerance: ± 0.25

4.2 Suggested printing image

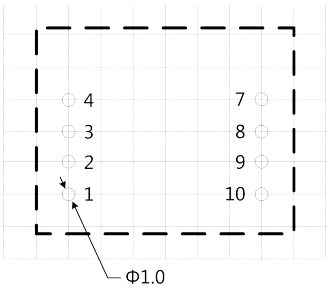

Note: The grid spacing is 2.54 * 2.54mm

4.3 Pin Definition

Pin		describe
Serial Number	name	
1	VCC	Positive power input
2	GND	Power input ground
3	TXD	Data sending pin
4	RXD	Data receiving foot
7	VO	Isolation output power supply positive
8	B	RS-485 B-pin
9	A	RS-485 pin A
10	RGND	Isolation output power ground

5 Product Model Table

PRODUCT MODEL	Power supply voltage range (VDC)	static current (mA,Typ)	maximum operating current (mA)	Transmission baud rate (kbps)	Nodes (pcs)	type
TD321D485H-A	3.3 (3.15~3.45)	35	130	500	128	high speed
TD521D485H-A	5 (4.75~5.25)	30	90	500	128	high speed

6 Specification parameters

6.1 Maximum limit parameter

Using beyond the following limit values may cause permanent damage to the module,

project	condition	minimum value	Nominal value	Maximum value	unit
Input Voltage	TD321D485H-A	-0.7	3.3	5	V dc
	TD521D485H-A	-0.7	5	7	
Pin soldering temperature resistance	Manual welding @ 3-5 seconds	--	370	--	℃
	Wave soldering @ 5-10 seconds	--	265	--	
hot plugging	--	Not Supported			

Note: This series of modules does not have input anti reverse connection function. It is strictly prohibited to input positive and negative connections in reverse, otherwise it will cause irreversible damage to the module.

6.2 Input characteristics

project		symbol	condition	minimum value	Nominal value	Maximum value	unit
INPUT VOLTAGE		V_{CC}	TD321D485H-A	3.15	3.3	3.45	VDC
			TD521D485H-A	4.75	5	5.25	
TXD logic level	high level	V_{IH}		$0.7V_{CC}$	--	$V_{CC}+0.5$	
	Low Level	V_{IL}		0	--	$0.3V_{CC}$	
RXD logic level	high level	VOH	I_{RXD}=4mA	$V_{CC-0.4}$	$V_{CC-0.2}$	--	
	Low Level	VOL	I_{RXD}=4mA	--	0.2	0.4	
TXD driving current		I_{TXD}		2			mA
RXD output current		I_{RXD}				10	
TXD pull-up resistor		R_{TXD}			10		kΩ
serial interface			TD321D485H-A	3.3V standard UART interface			
			TD521D485H-A	5V standard UART interface			

6.3 output characteristic

project	symbol	condition	minimum value	Nominal value	Maximum value	unit
Built in isolated output power supply voltage	VO	Rated input voltage	--	--	--	VDC
Differential output voltage (A-B)	VOD	Nominal input voltage, differential load of 54 Ω	1.5	--	VO	
Differential output current (A-B)	I_{OD}		28	--	--	mA
Bus interface protection			ESD electrostatic protection			

6.4 Transmission characteristics

project	symbol	condition	minimum value	Nominal value	Maximum value	unit
Built in pull-up and pull-down resistors			--	47	--	kΩ

project	symbol	condition	minimum value	Nominal value	Maximum value	unit
Input impedance of transceiver		-7V≤VCM≤+12V	48	--	--	
Data transmission delay			--	1000	--	ns
Data reception delay			--	100	--	

6.5 Truth table characteristics

project	input	output	
Sending function	TXD	A	B
	1	1	0
	0	0	1
Receiving function	V_{A-VB}	RXD	
	≥+200mV	1	
	≤-200mV	0	
	$-200mV<V_A-V_B<+200mV$	uncertain state	

6.6 General characteristics

project	condition	minimum value	Nominal value	Maximum value	unit
Electrical isolation		Isolation at both ends (input and output are isolated from each other)			
Isolation Voltage	Test time 1 minute, leakage current<5mA, humidity<95%	--	2.5K	--	VDC
Working temperature range	Output as full load	-40	--	+85	℃
storage temperature	--	-55	--	+105	℃
Storage humidity	No condensation	--	--	95	%
Temperature rise of the casing during operation		--	20	--	℃
Usage environment	The presence of dust, strong vibrations, impacts, and gases that corrode product components in the surrounding environment may cause damage to the product				

6.7 physical property

project	condition
Housing material	Black flame retardant and heat-resistant plastic (UL94-V0)
Package Size	19.50*16.50*7.10mm
weight	4.0g (nominal)
Cooling method	Natural air cooling

6.8 EMC characteristics

classification	project	parameter	grade
EMS	Electrostatic Discharge	IEC/EN 61000-4-2 Contact ± 4KV/Air ± 8KV (bare metal)	Perf.Criteria B
		IEC/EN 61000-4-2 Contact ± 8KV/Air ± 15KV (recommended circuit shown in Figure 2/Figure 3)	Perf.Criteria B
	Pulse group immunity	IEC/EN 61000-4-4 ±2KV	Perf.Criteria B
	Lightning surge immunity	IEC/EN 61000-4-5 common mode ± 2KV (bare metal)	Perf.Criteria B
		IEC/EN 61000-4-5 differential mode ± 2KV, common mode ± 4KV (recommended circuit shown in Figure 2/Figure 3)	Perf.Criteria B
	Conducted disturbance immunity	IEC/EN61000-4-6 3Vr.m.s	Perf.Criteria A

7 design reference

7.1 Typical applications

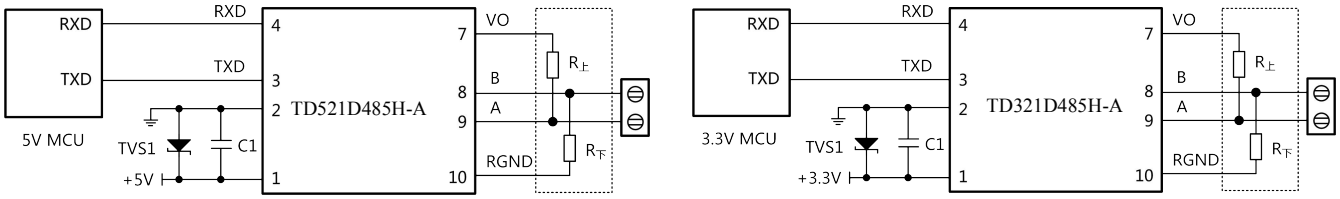

Figure 1. MCU 5V power supply application circuit diagram 2. MCU 3.3V power supply application circuit

Figure 1 shows the connection diagram between the UART interface of the 5V MCU system and the TD521D485H-A isolated transceiver module. The module must be powered by a 5V power supply, and the TXD and RXD pin interfaces of the module are matched with a voltage level of 5V and do not support 3.3V system voltage. Figure 2 shows the connection diagram between the UART interface of the 3.3V MCU system and the TD321D485H-A isolated transceiver module. The module must be powered by a 3.3V power supply, and the TXD and RXD pin interfaces of the module are matched with a voltage level of 3.3V and do not support 5V system voltage.

7.2 EMC Typical Recommended Circuit

Due to the built-in pull-up and pull-down resistors and ESD protection devices in the A/B lines of the module, there is generally no need to add ESD protection devices when it is applied in a good environment, as shown in the typical connection circuit diagram in 7.1 Typical Applications. But if the application environment is relatively harsh (such as high voltage power, lightning strikes, etc.), it is recommended that users must add protective measures such as pull-down resistors, TVS tubes, common mode inductors, lightning protection tubes, shielded twisted pair cables, or single point grounding of the same network to the A/B terminals of the module.

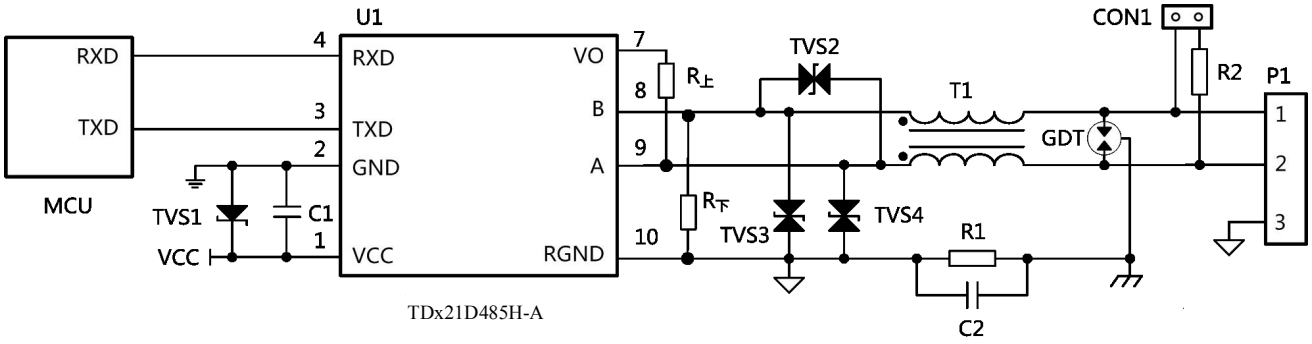

Figure 3 EMC Recommended Circuit

If specific surge level requirements need to be met, it is recommended to use the recommended protection circuit shown in Figure 3. Table 1 provides a set of recommended device parameters, and the recommended circuit diagram and parameter values are for reference only. Please determine the appropriate parameter values based on the actual situation.

Table 1. Recommended EMC Parameters

label	model	label	model
C1	10μF, 25V	TVS1	SMBJ5.0A
C2	102, 2KV, 1206	TVS2	SMBJ12CA
GDT	3RL090M-5-S	TVS3, TVS4	SMBJ6.5CA
R1	1MΩ, 1206	T1	B8279S0513N201
R2	120Ω, 1206	U1	TDx21D485H-A module

8 Product usage precautions

8.1 MCU IO port level matching

The TXD and RXD pin interfaces of TD521D485H-A are matched with a voltage level of 5V and do not support 3.3V system voltage; The TXD and RXD pin interfaces of TD321D485H-A are matched with a voltage level of 3.3V and do not support 5V system voltage.

8.2 Module RS485 A-B bus level threshold explanation

According to the characteristics of the truth table, the embedded isolated RS-485 transceiver module of this series has a high receiving level when the A/B line differential voltage is greater than or equal to+200mV; When the A/B line differential voltage is less than or equal to -200mV, the module's receiving level is low; When the differential voltage between A/B lines is greater than -200mV and less than+200mV, the module's receiving level is in an uncertain state, and the design should ensure that the module's receiving is not in this state. Therefore, when designing or applying RS-485 networks, users should decide whether to add a 120 Ω terminal resistor based on the actual situation. Usage principle: Regardless of whether the RS-485 network is in a static or dynamic state, it is necessary to ensure that the A/B line differential voltage is not between -200mV and+200mV, otherwise communication errors may occur.

8.3 Module Pin Description

When pins 5 and 6 are not connected and pins 7 and 10 are not in use, please suspend these pins.

8.4 The use of shielded wires

Please use shielded twisted pair cables for data transmission, and connect the shielding layer of the same network to the ground at a single point; If better anti-interference capability is required for the RS-485 network, double-layer shielded twisted pair cables can be used, with each node's RGND connected to the inner shielding layer and the outer shielding layer connected to the ground at a single point.

8.5 External pull-up and pull-down resistors

If the application environment is harsh (such as high voltage power, lightning strikes, etc.), ESD protection devices need to be added. Suitable pull-up and pull-down resistors and equivalent capacitors matched with ESD protection devices need to be externally connected to improve the waveform quality of communication signals.