CAN Isolated Transceiver

TDXXX485-HA

Medical electric equipment | Power Factor Correction | World wide | Safety Approvals | EMI | Inrush current limiting | OCP | OVP | Remote ON/OFF | Parallel Operation | 1U

TD -series

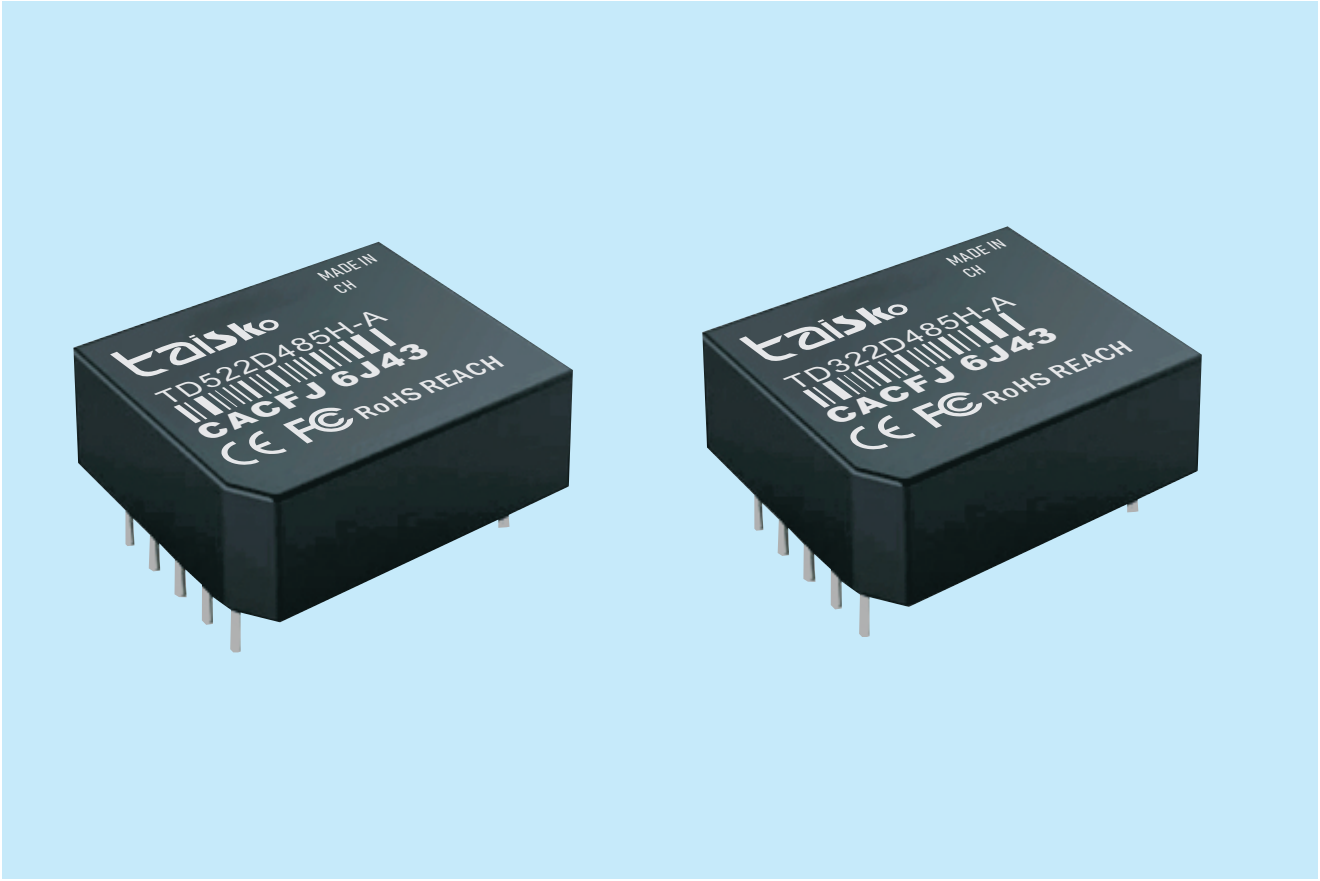

Feature

RS485 isolated transceiver
It is an integrated transceiver chip
Isolation chip and DC/DC
Integrated isolated power supply
The interface isolation transceiver module
Can completely replace tradition
The optocoupler isolation scheme
In the past, we needed to send and receive chips
Isolation chip/optocoupler
Only by isolating the power supply can it be achieved
The entire isolation and transmission plan
Now we only need to collect
Using an RS485
Isolation transceiver module
It can be easily achieved
Greatly simplified the customer's design.

Safety agency approval

ENI 55032:2015/A1:2020
EN IEC 62368-1:2020+A11:2020
IEC 62321-1:2013IEC 62321-2:2021IEC 62321-3-1:2013,

Up to 5-year warranty (Refer to Instruction Manual)

CE FCC marking

Low Voltage Directive
RoHS Directive

ROHS REACH marking

Electrical Equipment Safety Regulations
RoHS Regulations

EMI

・PCA300F, PCA600F
Complies with FCC-B, CISPR32-B, EN55011-B, EN55032-B, VCCI-B
・PCA1000F, PCA1500F
Complies with FCC-A, CISPR32-A, EN55011-A, EN55032-A, VCCI-A

EMS Compliance : EN61204-3, EN61000-6-2 IEC60601-1-2 (2014), EN60601-1-2 (2015)

EN61000-4-2
EN61000-4-3
EN61000-4-4
EN61000-4-5
EN61000-4-6
EN61000-4-8
EN61000-4-11

Dual Isolated RS-485 Auto Transceiver

1 Product Features:

Single input power supply
No isolated output power supply pin
Two RS-485 channels isolated from each other
Automatic data sending and receiving function
Extremely low electromagnetic radiation EMI
Integrated power isolation, signal isolation and bus ESD protection function

2 Product Description:

TD322D485H-A / TD522D485H-A, the main function will be the logic level conversion to RS-485 protocol differential level, to achieve signal isolation; is an IC integration technology, power isolation, signal isolation, RS-485 communication and bus protection in one RS-485 protocol transceiver module. The product comes with fixed-voltage isolation power supply, which can realize 2500VDC electrical isolation. The product integrates 2 mutually isolated RS-485 channels, RS-485 data transceiver can be automatically switched, conveniently embedded in the user's equipment, so that the equipment easily realize the RS-485 protocol network connection function.

3 Scope of application:

Industrial communications, coal mining industry, power monitoring, building automation...

4 Appearance Dimension and Pin Description:

4.1 Appearance Dimensions

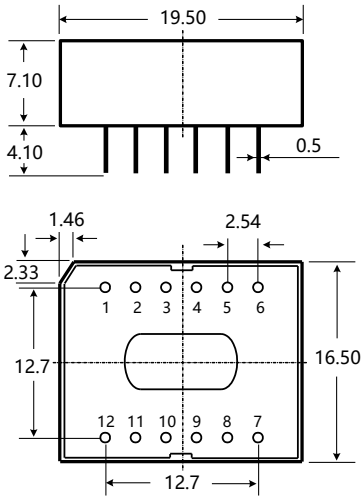

Note:

Size unit: mm

Tolerance of terminal diameter：±0.10

Tolerance of unmarked: ±0.25

4.2 Suggested Printing Diagram

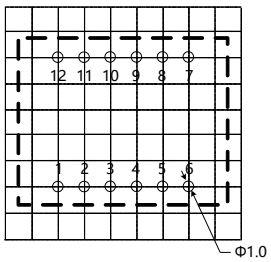

Note: Grid spacing is 2.54*2.54mm

4.3 Pin Definition

Pin		Description
Serial Number	Name	
1	VCC	Power input positive
2	GND	Power input ground
3	TXD1	TXD1
4	RXD1	Receive pin 1
5	TXD2	Transmit pin 2
6	RXD2	Receive pin 2
7	A2	RS-485 A2 pin
8	B2	RS-485 B2 pin
9	G2	Isolated power output ground 2
10	A1	RS-485 A1 pin
11	B1	RS-485 B1 pin
12	G1	Isolated power output ground 1

5 Model Number Table

Model Number	Power Supply Voltage Range (VDC)	Quiescent Current (mA,Typ)	Maximum Operating Current (mA)	Transmission Baud Rate (kbps)	Number of nodes (pcs)	Type
TD322D485H-A	3.3 (3.15~3.45)	38	200	115.2	32	High Speed
TD522D485H-A	5 (4.75~5.25)	36	150	115.2	32	High speed

6 Specifications

6.1 Maximum Limit Parameters

Use beyond the following limits may result in permanent damage to the module.

Item	Condition	Minimum value	Nominal value	Maximum value	Unit
Input Voltage Range	TD322D485H-A	-0.7	3.3	5	V dc
	TD522D485H-A	-0.7	5	7	
Pin Soldering Temperature	Hand soldering @ 3~5 sec	--	370	--	℃
	Wave soldering @ 5~10 sec	--	265	--	
Thermal Unplugging	--	Not support			

Note: This series of modules do not have input anti-reverse connection function, it is strictly prohibited to reverse the positive and negative inputs, otherwise it will cause irreversible damage to the module.

6.2 Input Characteristics

Item		Symbol	Condition	Minimum value	Nominal value	Maximum value	Unit
Input Voltage		V_{CC}	TD322D485H-A	3.15	3.3	3.45	V_{DC}
			TD522D485H-A	4.75	5	5.25	
TXD Logic Level	High Level	V_{IH}		$0.7V_{CC}$	--	V_{CC}+0.5	
	Low Level	V_{IL}		0	--	$0.3V_{CC}$	
RXD Logic Level	High Level	V_{OH}	I_{RXD}= -2mA	2.0	--	--	
	Low level	V_{OL}	I_{RXD}= 2mA	----------	--	0.8	
TXD drive current		I_{TXD}		--	--	2	mA
RXD output current		I_{RXD}		---	--	2	
Serial Interface			TD322D485H-A	3.3V Standard UART Interface			
			TD522D485H-A	5V standard UART interface			

6.3 Output Characteristics

Item	Symbol	Condition	Minimum value	Nominal value	Maximum value	Unit
Built-in isolated output supply voltage	V_O	Nominal Input Voltage	----------	--	--	VDC
Differential Output Voltage (A-B)	V_{OD}	Nominal input voltage with differential load of 54Ω	1.5	--	VO	

Item	Symbol	Condition	Minimum value	Nominal value	Maximum value	Unit
Differential output current (A-B)	I_{OD}		28	--	--	mA
Bus Interface Protection			ESD static protection			

6.4 Transmission characteristics

Item	Symbol	Condition	Minimum value	Nominal value	Maximum value	Unit
Built-in pull-up and pull-down resistors			--	4.7	--	kΩ
Transceiver Input Impedance		-7V≤VCM≤+12V	48	--	--	
Data transmission delay			--	1000	--	ns
Data reception delay			--	100	---	

6.5 Truth Table Characteristics

Item	Input	Output	
Transmit Function	**TXD**	**A**	**TXD A**
	1	1	0
	1 1 0	1 1 0 0	1
Receive Function	**V_A-V_B**	**RXD**	
	≥+200mV	1	
	≤-200mV	RXD ≥+200mV 1 ≤-200mV	
	-200mV ＜V_A-V_B ＜+200mV	Uncertain state	

6.6 General Characteristics

Item	Condition	Minimum value	Nominal value	Maximum value	Unit
Electrical isolation		Isolation at both ends (input and output are isolated from each other)			

Item	Condition	Minimum value	Nominal value	Maximum value	Unit
Isolation voltage	Test time 1 minute, Leakage current <5mA, Humidity <95%	--	2.5K	--	VDC
Operating Temperature Range	Output is full load	-40	--	+85	℃
Storage temperature	--	-55	--	+105	℃
Storage humidity	Non-condensing	--	--	95	%
Temperature rise of the housing during operation		--	20	----------	℃
Operating environment	The product may be damaged by the presence of dust, strong vibrations, shocks, and gases that corrode the components of the product.				

6.7 Physical Characteristics

Item	Conditions of use
Enclosure Material	Black flame retardant heat resistant plastic (UL94-V0)
Package size	19.50*16.50*7.10mm
Weight	4.0g (nominal)
Cooling Method	Natural air cooling

6.8 EMC Characteristics

Classification	Item	Parameter	Class
EMS	Electrostatic discharge immunity	IEC/EN 61000-4-2 Contact ±4KV/Air ±8KV (bare metal)	Perf.Criteria B
		IEC/EN 61000-4-2 Contact ±8KV/Air ±15KV (see Figure 3 for recommended circuit)	Perf.Criteria B
	Pulse group immunity	IEC/EN 61000-4-4 ±2KV	Perf.Criteria B
	Lightning surge immunity	IEC/EN 61000-4-5 Common mode ±2KV (bare metal)	Perf.
		IEC/EN 61000-4-5 Differential mode ±2KV, common mode ±4KV (see Figure 3 for recommended circuit)	Perf.Criteria B
	Conducted Nuisance Immunity	IEC/EN 61000-4-6 3Vr.m.s	Perf.

7 Design Reference

7.1 Typical Application

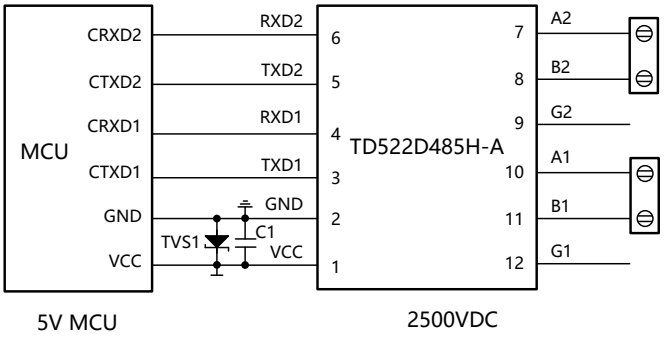

Figure 1. MCU 5V Power Supply Application Circuitry

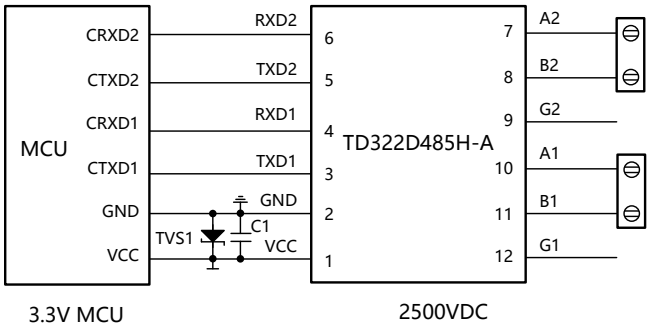

Figure 2. MCU 3.3V Power Supply Application Circuitry

Figure 1 shows the connection between the 5V MCU system UART interface and the TD522D485H-A Isolated Transceiver Module. The module must be powered by a 5V power supply, and the TXD and RXD pin interfaces of the module match the level of 5V, and do not support the 3.3V system level. Figure 2 shows the connection diagram of the 3.3V MCU system UART interface with the TD322D485H-A isolated transceiver module, the module must be powered by a 3.3V power supply, and the module's TXD and RXD pin interfaces match the level of 3.3V, and do not support 5V system levels.

7.2 EMC Typical Recommended Circuit

As the module internal A/B line with pull-up and down resistors and ESD protection devices, so generally used in good environmental conditions without the need to add ESD protection devices, such as 7.1 typical applications shown in the typical connection circuit diagram. However, if the application environment is more severe (such as high-voltage power, lightning and other environments), it is recommended that the user must be in the module at the A/B line end of the external TVS tubes, common-mode inductors, lightning tubes, shielded twisted-pair cables, or the same network of single-point ground and other protective measures.

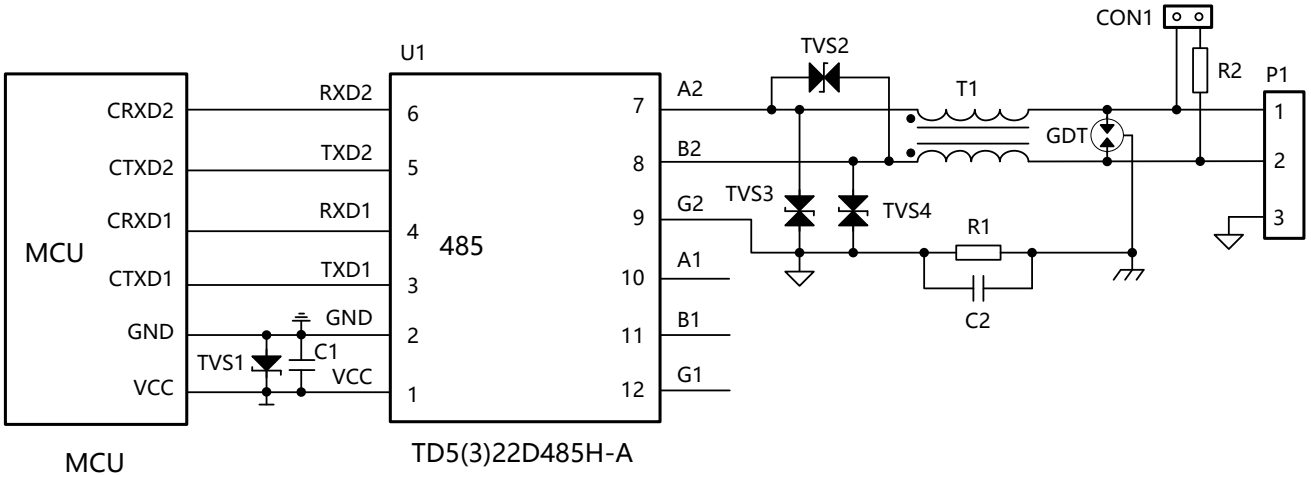

Figure 3. EMC Recommended Circuitry

If you need to meet specific surge level requirements, it is recommended to use the recommended protection circuit shown in Figure 3, Table 1 gives a set of recommended device parameters, the recommended circuit diagram and parameter values are for reference only, please determine the appropriate parameter values according to the actual situation.

Table 1. EMC Recommended Parameters

Label	Model	Marker	Model No.
C1	10μF, 25V	TVS1	SMBJ5.0A
C2	102, 2KV, 1206	TVS2	SMBJ12CA
GDT	3RL090M-5-S	TVS3, TVS4	SMBJ6.5CA
R1	1MΩ, 1206	T1	B82793S0513N201
R2	120Ω, 1206	U1	TD5(3)22D485H-A Module

8 Precautions for Product Use

8.1 MCU IO Port Level Matching

TD522D485H-A TXD, RXD pin interface matching level is 5V, does not support 3.3V system level; TD322D485H-A TXD, RXD pin interface matching level is 3.3V, does not support 5V system level.

8.2 Module RS485 A-B Bus Level Threshold Description

From the truth table characteristics can be seen, the series of embedded isolated RS-485 transceiver module when the A/B line differential voltage is greater than or equal to +200mV, the module receive level is high; when the A/B line differential voltage is less than or equal to -200mV, the module receive level is low; when the A/B line differential voltage is greater than -200mV and is less than +200mV, the module receive level for the uncertainty state, the design should ensure that the module receive is not in a state of -200mV and less than +200mV. The design should ensure that the module reception is not in this state. So users in the design or application of RS-485 network, according to the actual situation to decide whether to add 120 Ω termination resistor. Principle of use: Regardless of whether the RS-485 network is in a static or dynamic situation, it must be ensured that the differential voltage of A/B line is not between -200mV and +200mV, or communication errors will occur.

8.3 Module Pin Description

When module pins 9 and 12 are not used, please leave this pin empty.

8.4 Shielded Cable

Please use shielded twisted-pair cable for data transmission line, and connect the shielding layer of the same network to the earth at a single point; if you require RS-485 network to have better anti-jamming ability, you can use double shielded twisted-pair cable, and RGND of each node is connected to the inner shielding layer, and the outer shielding layer is then connected to the earth at a single point.