CAN Isolated Transceiver

TDXXXDCAN

Medical electric equipment | Power Factor Correction | World wide | Safety Approvals | EMI | Inrush current limiting | OCP | OVP | Remote ON/OFF | Parallel Operation | 1U

TD-series

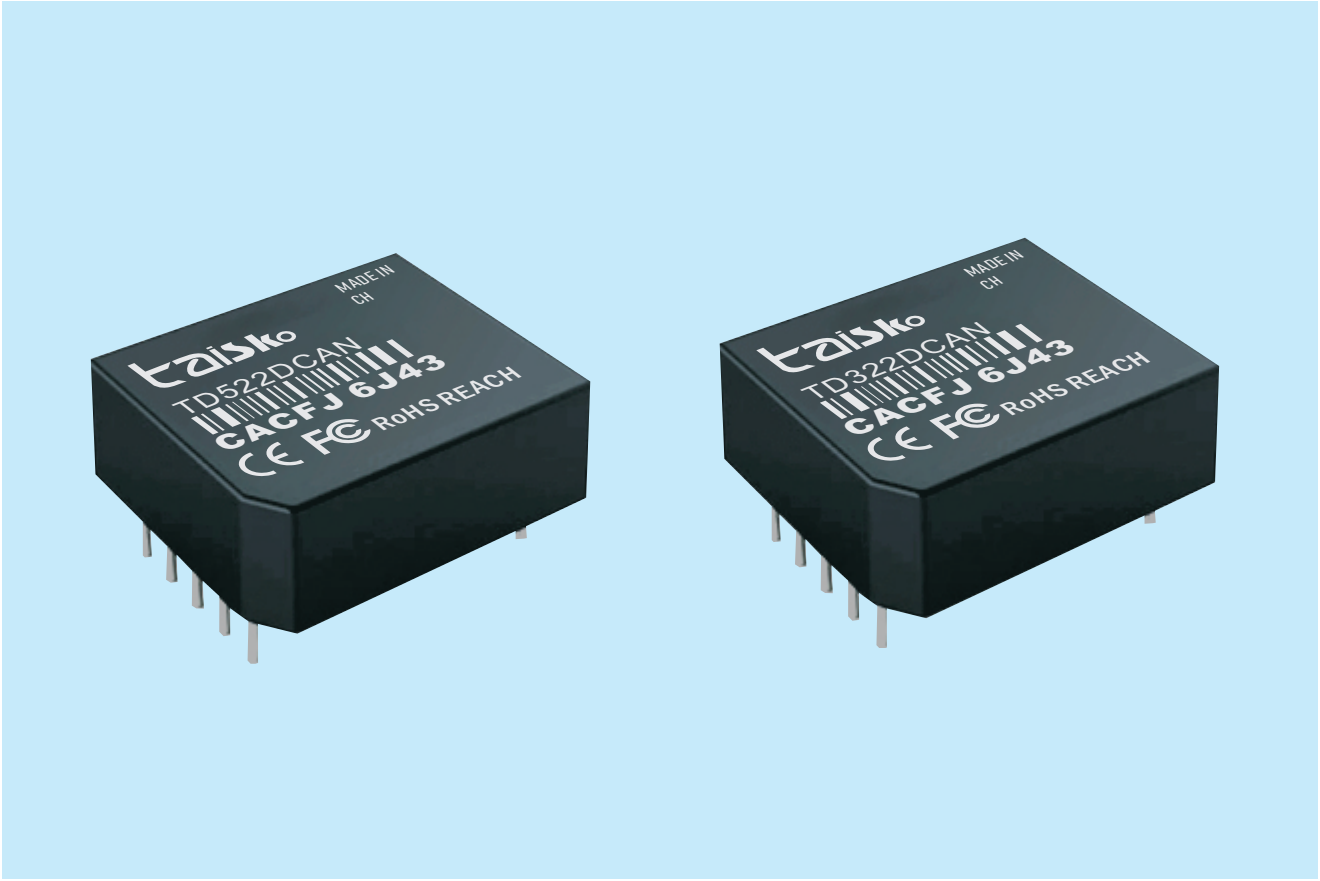

Feature

RS485 isolated transceiver
It is an integrated transceiver chip
Isolation chip and DC/DC
Integrated isolated power supply
The interface isolation transceiver module
Can completely replace tradition
The optocoupler isolation scheme
In the past, we needed to send and receive chips
Isolation chip/optocoupler
Only by isolating the power supply can it be achieved
The entire isolation and transmission plan
Now we only need to collect
Using an RS485
Isolation transceiver module
It can be easily achieved
Greatly simplified the customer's design.

Safety agency approval

ENI 55032:2015/A1:2020
EN IEC 62368-1:2020+A11:2020
IEC 62321-1:2013IEC 62321-2:2021IEC 62321-3-1:2013,

Up to 5-year warranty (Refer to Instruction Manual)

CE FCC marking

Low Voltage Directive
RoHS Directive

ROHS REACH marking

Electrical Equipment Safety Regulations
RoHS Regulations

EMI

・PCA300F, PCA600F
Complies with FCC-B, CISPR32-B, EN55011-B, EN55032-B, VCCI-B
・PCA1000F, PCA1500F
Complies with FCC-A, CISPR32-A, EN55011-A, EN55032-A, VCCI-A

EMS Compliance : EN61204-3, EN61000-6-2 IEC60601-1-2 (2014), EN60601-1-2 (2015)

EN61000-4-2
EN61000-4-3
EN61000-4-4
EN61000-4-5
EN61000-4-6
EN61000-4-8
EN61000-4-11

Universal Dual Dual Isolated CAN Transceiver

1 Product Features:

Complies with "ISO 11898-2" standard.

Unpowered nodes do not affect the bus

At least 110 nodes can be connected to a single network

Housing and potting material comply with UL94-V0 standard.

Very low electromagnetic radiation and high anti-electromagnetic interference.

Good high and low temperature characteristics, to meet the requirements of industrial-grade products

2 Product Description:

Universal Dual-Circuit Dual-Isolation CAN Transceiver Module Series TD322DCAN/TD522DCAN is a two-circuit CAN bus transceiver module that integrates isolated power supply, signal isolation chip, and CAN transceiver chip into one. The main function of the product is to convert logic level to CAN bus differential level, realize signal isolation, and isolate the two CAN bus transceivers from each other; the product comes with a fixed-voltage isolation power supply, which can realize electrical isolation of 2500VDC and has high ESD protection function. The product can be conveniently embedded in the user's equipment, so that the equipment can easily realize the connection function of the CAN bus network.

3 Scope of application:

Automotive electronics, instruments, meters, railroad transportation, petrochemical, power monitoring, industrial control, smart home...

4 Appearance Dimension and Pin Description:

4.1 Appearance Dimension

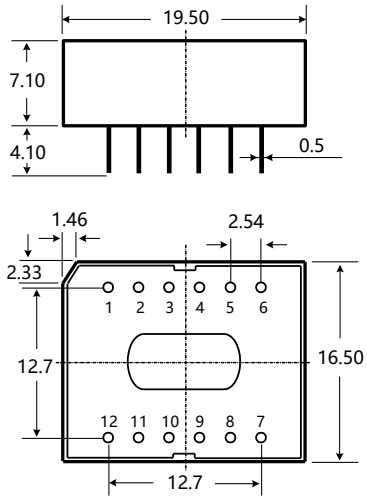

Note:

Size unit: mm

Tolerance of terminal diameter：±0.10

Tolerance of unmarked: ±0.25

4.2 Suggested Printing Diagram

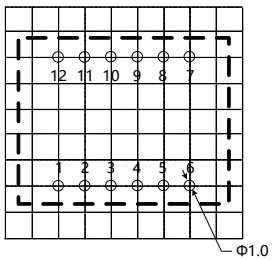

Note: Grid spacing is 2.54*2.54mm

4.3 Pin Definition

Pin		Description
Serial Number	Name	
1	VCC	Power input positive
2	GND	Power input ground
3	RXD1	Receive pin 1
4	TXD1	Transmit pin 1
5	RXD2	Receive pin 2
6	TXD2	Send pin 2
7	CANH2	CANH pin 2
8	CANL2	CANL pin 2
9	CANG2	Isolated Power Output Ground 2
10	CANH1	CANH pin 1
11	CANL1	CANL pin 1
12	CANG1	Isolated Power Supply Output Ground 1

5 Model Number Table

Product Model Number	Power Supply Voltage Range (VDC)	Quiescent Current (mA,Typ)	Maximum Operating Current (mA)	Transmission Baud Rate (bps)	Number of nodes (pcs)	Type
TD322DCAN	3.3 (3.15~3.45)	63	250	5k~1M	110	General Purpose
TD522DCAN	5 (4.75~5.25)	45	45.75~5.25			

6 Specifications

6.1 Maximum Limit Parameters

Use beyond the following limit values may cause permanent damage to the module.

Item	Condition	Minimum value	Nominal value	Maximum value	Unit
Input Voltage Range	TD322DCAN	-0.7	3.3	5	V dc
	TD522DCAN	-0.7	5	7	
Pin Soldering Temperature	Hand soldering @ 3~5 sec	--	370	--	℃
	Wave soldering @ 5~10 sec	--	265	--	
Thermal Unplugging	--	Not support			

Note: This series of modules do not have input anti-reverse connection function, it is strictly prohibited to reverse the positive and negative inputs, otherwise it will cause irreversible damage to the module.

6.2 Input Characteristics

Item		Symbol	Condition	Minimum value	Nominal value	Maximum value	Unit
Input Voltage		V_{CC}	TD322DCAN	3.15	3.3	3.45	V_{DC}
			TD522DCAN	4.75	5	5.25	
TXD Logic Level	High Level	V_{IH}		$0.7V_{CC}$	--	V_{CC}+0.5	
	Low Level	V_{IL}		0	--	$0.3V_{CC}$	
RXD Logic Level	High Level	V_{OH}	I_{RXD}= -2mA	2.0	--	--	
	Low level	V_{OL}	I_{RXD}= 2mA	----------	--	0.8	
TXD drive current		I_{TXD}		--	--	2	mA
RXD output current		I_{RXD}		---	--	2	
Serial Interface			TD322DCAN	3.3V Standard CAN Controller Interface			
			TD522DCAN	5V standard CAN controller interface			

6.3 Output Characteristics

Item		Symbol	Minimum value	Nominal value	Maximum value	Unit
Dominant level (logic 0)	CANH	$V_{(OD)CANH}$	2.75	3.5	4.5	VDC
	CANL	$V_{(OD)CANL}$	0.5	1.5	2.25	

Item		Symbol	Minimum value	Nominal value	Maximum value	Unit
Logic level (logic 1)	CANH	$V_{(OR)CANH}$	2	2.5	3	
	CANL	$V_{(OR)CANL}$	2	2.5	3	
Differential level	Explicit (logic 0)	$V_{diff(d)}$	1.5	2	3	
	Implicit (logic 1)	$V_{diff(r)}$	-0.05	0	0.05	
Maximum withstand voltage at bus pins		V_x	-27	--	+40	
Bus Transient Voltage		V_{trt}	-100	--	+100	
Bus pin leakage current		(V_{CC}=0V, $V_{CANH/L}$=5V)	V(CANH/L =5V) -10	--- +10% (V(CC =0V), V(CANH/L =5V)	+10	V(CANH /L =5V) -10 -- +10 μA
Bus interface protection		ISO/DIS 11898 compliant, twisted pair outputs				

6.4 Transmission characteristics

Item		Symbol	Minimum value	Nominal value	Maximum value	Unit
Data Delay	TXD Transmission Delay	t_T	--	80	--	ns
	RXD receive delay	t_R	--	130	--	
	Cyclic delay	$t_{PD(TXD-RXD)}$	--	210	250	
TXD dominant timeout		$T_{to(dom)TXD}$	2.5	--	16	ms

6.5 General Characteristics

Item	Condition	Minimum value	Nominal value	Maximum value	Unit
Isolation Voltage	Input-Output, test time 1 minute, leakage current <5mA	2.5K	--	--	VDC
	Between two outputs, test time 1 minute, leakage current <5mA	1.5K	--	--	
Operating Temperature Range	Outputs are full load	--40	--	+ 105	℃
Storage temperature	--	-55	--	+125	℃
Storage humidity	Non-condensing	--	--	95	%

Item	Condition	Minimum value	Nominal value	Maximum value	Unit
Temperature rise of the housing during operation		----------	20	Temperature rise of the housing during operation -- 20	℃
Operating environment	The product may be damaged by the presence of dust, strong vibrations, shocks, and gases that corrode the components of the product.				

6.6 Physical Characteristics

Item	Conditions of use.
Enclosure Material	Black flame retardant heat resistant plastic (UL94-V0)
Package size	19.50*16.50*7.10mm
Weight	4.0g (nominal)
Cooling Method	Natural air cooling

6.7 EMC Characteristics

Classification	Item	Parameter	Class
EMS	Electrostatic discharge immunity	IEC/EN 61000-4-2 Contact ±4KV/Air ±8KV (bare metal)	Perf.Criteria B
		IEC/EN 61000-4-2 Contact ±8KV/Air ±15KV (see Fig. 2 for recommended circuit)	Perf.Criteria B
	Pulse group immunity	IEC/EN 61000-4-4 ±2KV	Perf.Criteria B
	Lightning surge immunity	IEC/EN 61000-4-5 Common mode ±2KV (bare metal)	Perf.
		IEC/EN 61000-4-5 Differential mode ±2KV, common mode ±4KV (see Figure 2 for recommended circuitry)	Perf.Criteria B
	Conducted Nuisance Immunity	IEC/EN 61000-4-6 3Vr.m.s	Perf.

7 Design Reference

7.1 Typical Applications

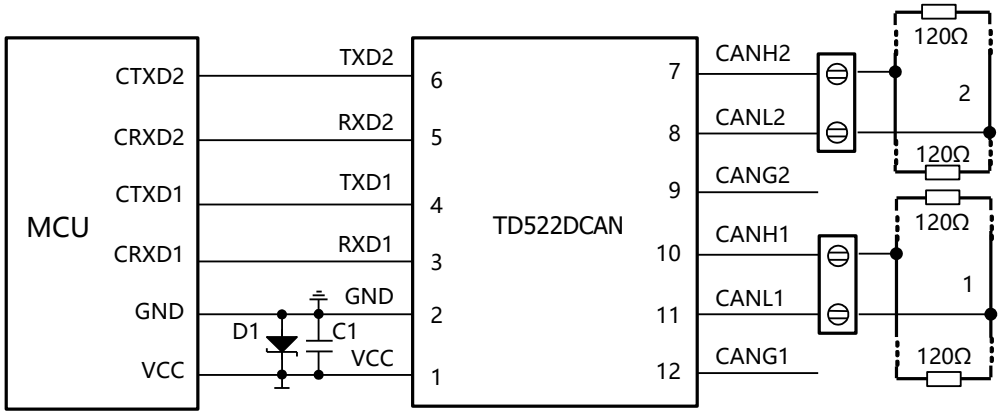

Figure 1. Typical Connection Circuit

The TDx22DCAN can be used between two different CAN networks, e.g. in a CAN bridge or a CAN repeater. The two CAN channels are independent and isolated from each other. The module can be used for simple applications in good environments, such as transceiver testing, short distance communication testing of products, and so on. The module is connected to the power supply, the ports are connected to the MCU and the CAN network bus. In general, the module is connected to the power supply, the ports are connected to the CAN controller and the CAN network bus, and it can be used directly without any additional devices. Figure 1 shows the 5V with CAN controller MCU interface and TD522DCAN isolation transceiver module connection diagram, the module must be powered by 5V power supply, the module's TXD, RXD pin interface to match the level of 5V, does not support the 3.3V system level. Similarly 3.3V MCU interface with CAN controller and TD322DCAN isolated transceiver module connection, the module must be powered by 3.3V power supply, the module's TXD, RXD pin interface matching level is 3.3V, does not support 5V system level.

7.2 EMC Typical Recommended Circuit

Generally applied to the environment of good occasions without the need to add ESD protection devices, such as 7.1 typical applications shown in the typical connection circuit diagram. However, if the application environment is harsh (e.g., high voltage power, lightning, etc.), it is recommended that the user must add TVS tubes, common mode inductors, lightning

protection tubes, shielded twisted pairs of wires, or a single point of the same network connected to the earth, and other protective measures to the CANH/CANL line end of the module.

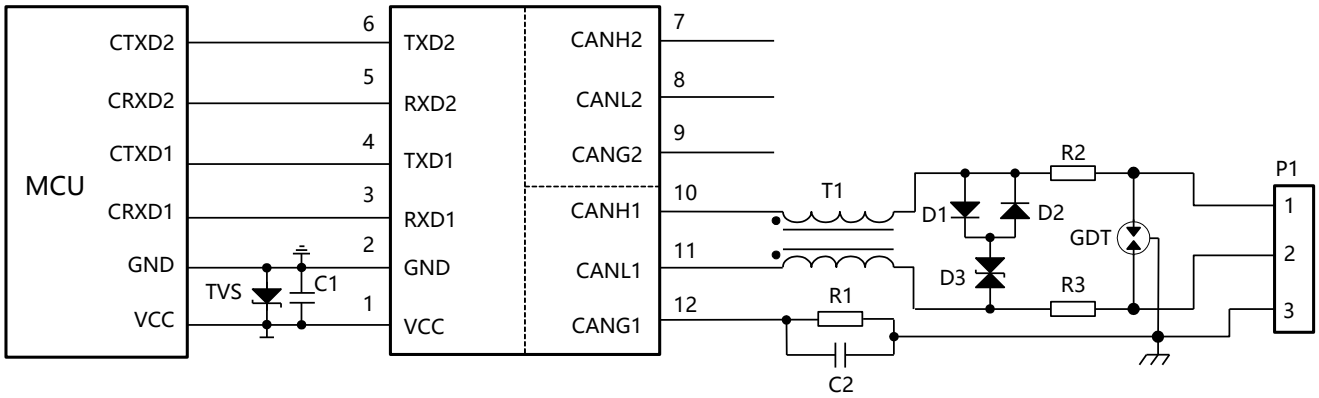

Figure 2. EMC Recommended Circuitry

If you need to meet specific surge level requirements, it is recommended to use the recommended protection circuit shown in Figure 4. Table 1 gives a set of recommended device parameters, the recommended circuit diagram and parameter values are for reference only, please determine the appropriate parameter values according to the actual situation.

Table 1. EMC Recommended Parameters

Label	Model	Marker	Model No.
C1	10μF, 25V	D1, D2	1N4007
C2	102, 2KV, 1206	D3	SMBJ15CA
GDT	3RL090M-5-S	T1	B82793S0513N201
R1	1MΩ, 1206	U1	TDx22DCAN Module
R2, R3	2.7Ω, 2W		

8 Precautions for Product Use

8.1 CAN Controller IO Port Level Matching

The TXD and RXD pin interface matching level of TD522DCAN is 5V, 3.3V system level is not supported; the TXD and RXD pin interface matching level of TD322DCAN is 3.3V, 5V system level is not supported.

8.2 Module Pin Descriptions

When pin 9 and pin 12 are not used, please dangle this pin.

8.3 Bus Termination Matching Resistor

When the CAN bus is networked, regardless of the number of nodes, distance, and operating rate, it is necessary to add termination resistors to the bus.

8.4 Use of Shielded Wire

Please use shielded twisted-pair cable for data transmission line, and connect the shielding layer of the same network to the earth at a single point; if CAN network is required to have better anti-jamming ability, double shielded twisted-pair cable can be used, and the CANG of each node is connected to the inner shielding layer, and the outer shielding layer is then connected to the earth at a single point.