SFP60N100,SFB60N100
SFP350N100C2,SFB347N100C2

N-MOSFET 100V, 30mΩ, 36A

Features

- Extremely low on-resistance $R_{DS(on)}$
- Excellent $Q_g x R_{DS(on)}$ product(FOM)
- Qualified according to JEDEC criteria

Product Summary

V_{DS}	100V
$R_{DS(on)\ typ.}$	30mΩ
I_D	36A

Applications

- Motor control and drive
- Battery management
- UPS (Uninterrupible Power Supplies)

100% DVDS Tested

100% Avalanche Tested

RoHS

TO-220

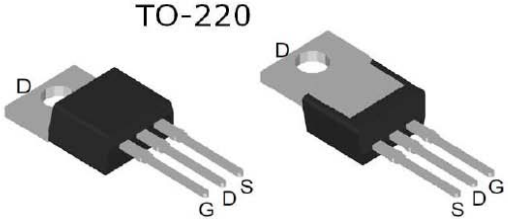

SFP60N100/SFP350N100C2

TO-263

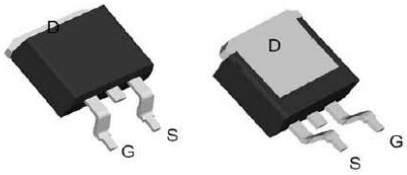

SFB60N100/SFB347N100C2

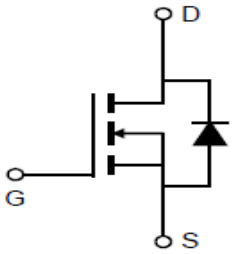

Package Marking and Ordering Information

Part #	Marking	Package	Packing	Reel Size	Tape Width	Qty
SFP60N100	60N100	TO-220	Tube	N/A	N/A	50pcs
SFB60N100	60N100	TO-263	Reel&Tape	330×24.8mm	24mm	800pcs
SFP350N100C2	350N100C2	TO-220	Tube	N/A	N/A	50pcs
SFB347N100C2	347N100C2	TO-263	Reel&Tape	330×24.8mm	24mm	800pcs

Absolute Maximum Ratings

Parameter	**Symbol**	**Value**	**Unit**
Drain-source voltage	V_{DS}	100	V
Continuous drain current T_C = 25°C (Silicon limit) T_C = 25°C (Package limit) T_C = 100°C (Silicon limit)	I_D	 36 80 23	A
Pulsed drain current (T_C = 25°C, t_p limited by T_{jmax})	$I_{D\ pulse}$	144	A
Avalanche energy, single pulse (L=0.5mH, Rg=25Ω)	E_{AS}	36	mJ
Gate-Source voltage	V_{GS}	±20	V
Power dissipation (T_C = 25°C)	P_{tot}	78	W
Operating junction and storage temperature	T_j , T_{stg}	-55...+150	°C
Soldering temperature, wave soldering only allowed at leads (1.6mm from case for 10s)	T_{sold}	260	°C

Thermal Resistance

Parameter	Symbol	Max	Unit
Thermal resistance, junction – case.	R_{thJC}	1.64	°C/W
Thermal resistance, junction – ambient(min. footprint)	R_{thJA}*	63	

Electrical Characteristic (at Tj = 25 °C, unless otherwise specified)

Parameter	Symbol	Value			Unit	Test Condition
		min.	typ.	max.		
Static Characteristic						
Drain-source breakdown voltage	BV_{DSS}	100	-	-	V	V_{GS}=0V, I_D=250uA
Gate threshold voltage	$V_{GS(th)}$	1.3	1.7	2.2	V	V_{DS}=V_{GS},I_D=250uA
Zero gate voltage drain current	I_{DSS}	- -	0.05 -	1 50	μA	V_{DS}=100V,V_{GS}=0V T_j=25°C T_j=150°C
Gate-source leakage current	I_{GSS}	-	±10	±100	nA	V_{GS}=±20V,V_{DS}=0V
Drain-source on-state resistance	$R_{DS(on)}$	- -	30 30	35 34.7	mΩ	V_{GS}=10V, I_D=18A, T_j=25°C TO-220 TO-263
Transconductance	g_{fs}	-	72	-	S	V_{DS}=5V,I_D=18A
Dynamic Characteristic						
Input Capacitance	C_{iss}	-	2512	-	pF	V_{GS}=0V, V_{DS}=50V, f=1MHz
Output Capacitance	C_{oss}	-	96	-		
Reverse Transfer Capacitance	C_{rss}	-	55	-		
Gate Total Charge	$_G$	-	60	-	nC	V_{GS}=10V, V_{DS}=50V, I_D=18A, f=1MHz
Gate-Source charge	$_{gs}$	-	9	-		
Gate-Drain charge	$_{gd}$	-	13	-		
Turn-on delay time	$t_{d(on)}$	-	10	-	ns	V_{GS}=10V, V_{DD}=50V, R_{G_ext}=2.7Ω, I_D=18A
Rise time	t_r	-	26	-		
Turn-off delay time	$t_{d(off)}$	-	44	-		
Fall time	t_f	-	55	-		
Gate resistance	R_G	-	1.1	-	Ω	V_{GS}=0V, V_{DS}=0V, f=1MHz

Body Diode Characteristic

Parameter	Symbol	Value			Unit	Test Condition
		min.	typ.	max.		
Body Diode Forward Voltage	V_{SD}	-	0.8	1.3	V	V_{GS}=0V,I_{SD}=18A
Body Diode Continuous Forward Current	I_S			36	A	T_C = 25°C
Body Diode Reverse Recovery Time	t_{rr}	-	36	-	ns	I_F=18A, dI/dt=100A/μs
Body Diode Reverse Recovery Charge	$_{rr}$	-	59	-	nC	

*The value of R_{thJA} is measured by placing the device in a still air box which is one cubic foot.

Typical Performance Characteristics

Fig 1: Output Characteristics

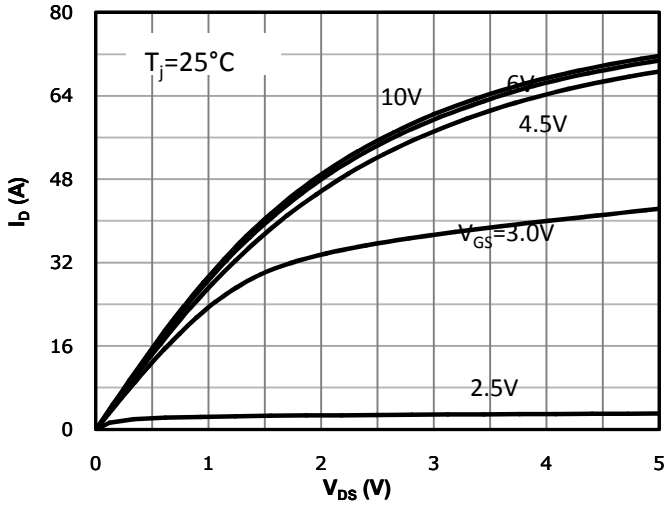

Fig 2: Transfer Characteristics

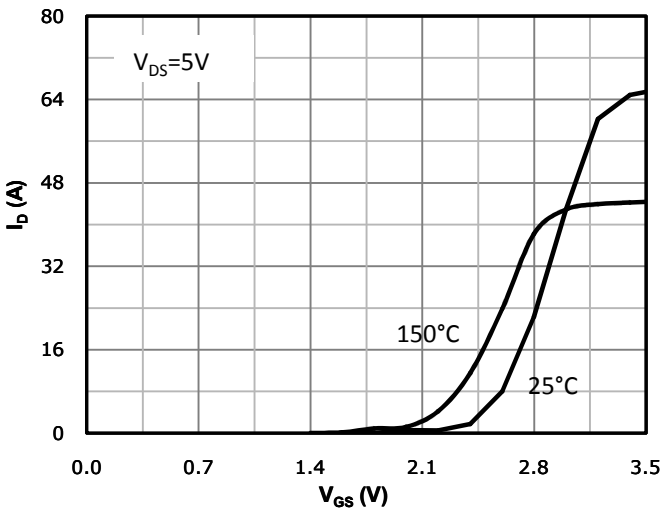

Fig 3: Rds(on) vs Drain Current and Gate Voltage

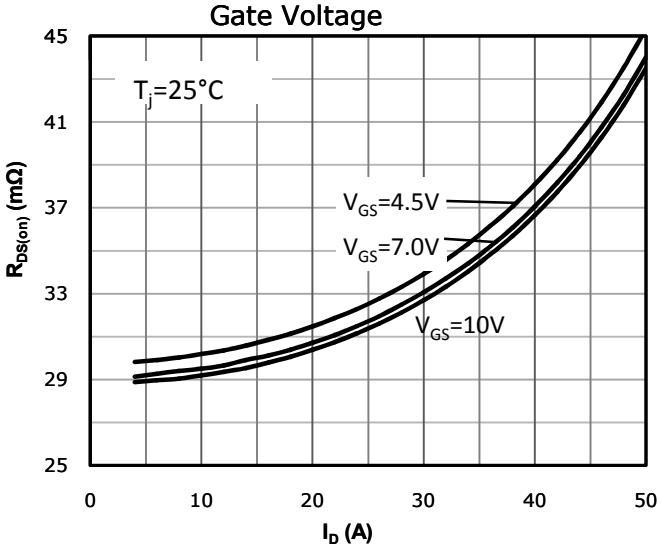

Fig 4: Rds(on) vs Gate Voltage

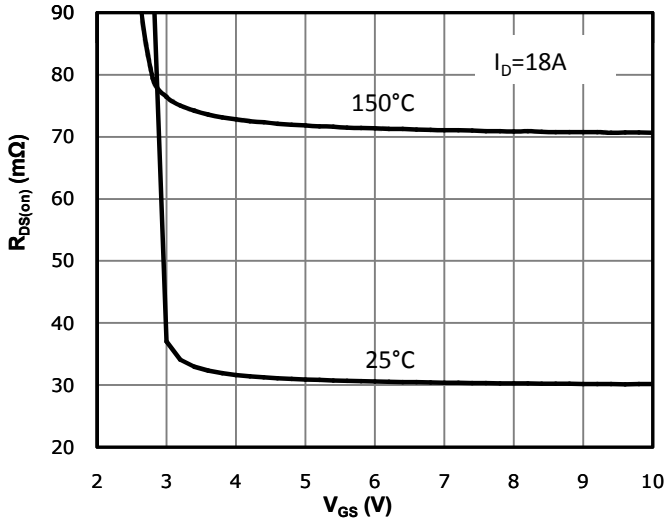

Fig 5: Rds(on) vs. Temperature

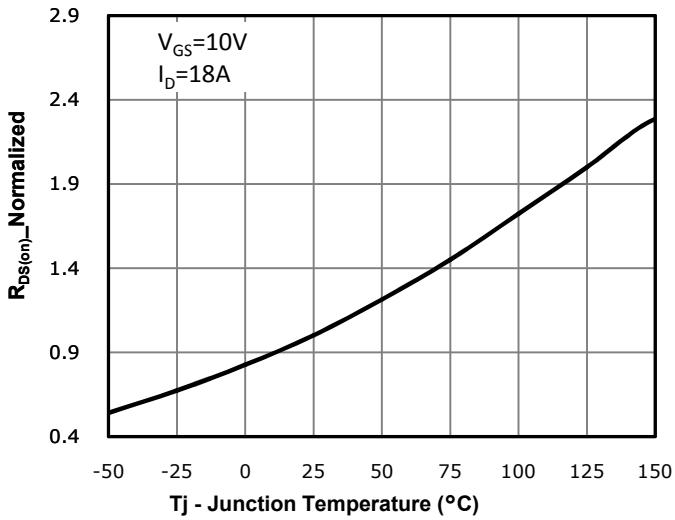

Fig 6: Capacitance Characteristics

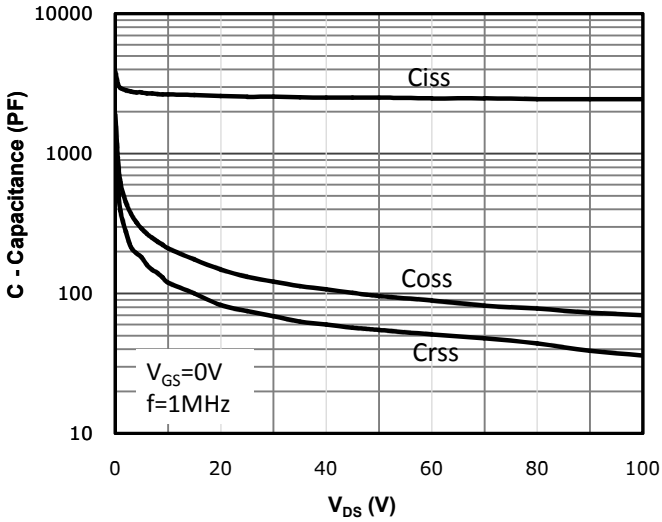

Fig 7: Gate Charge Characteristics

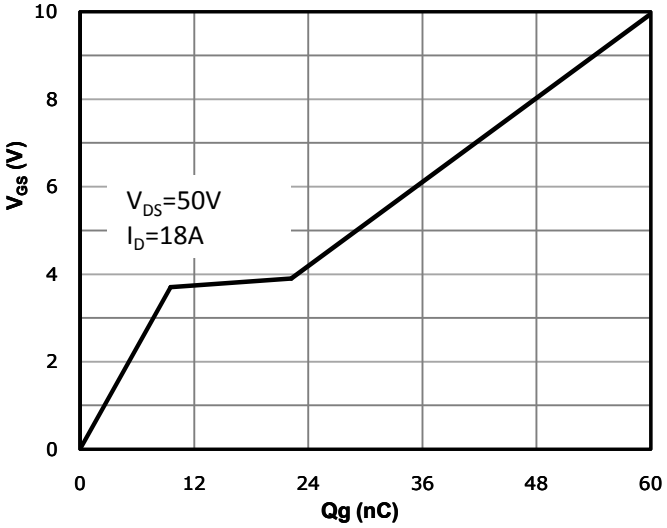

Fig 8: Body-diode Forward Characteristics

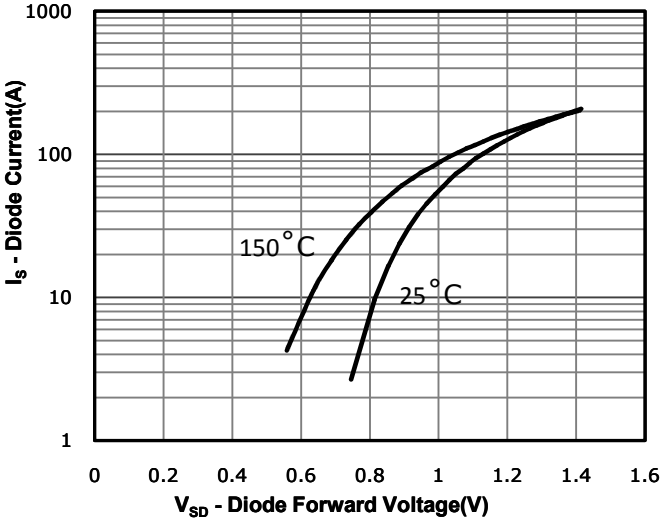

Fig 9: Power Dissipation

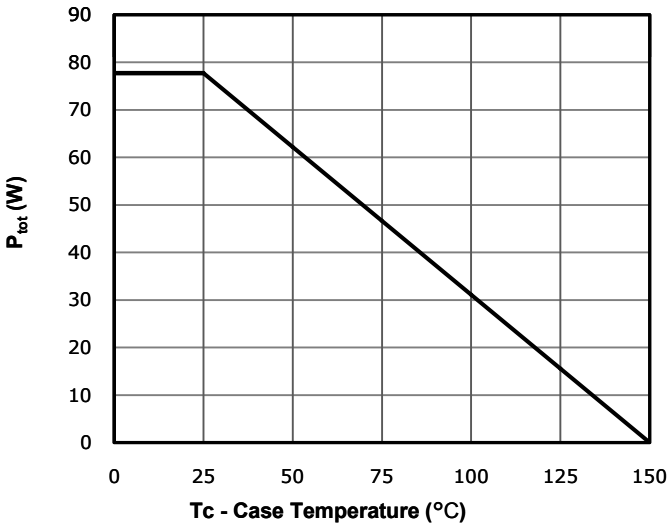

Fig 10: Drain Current Derating

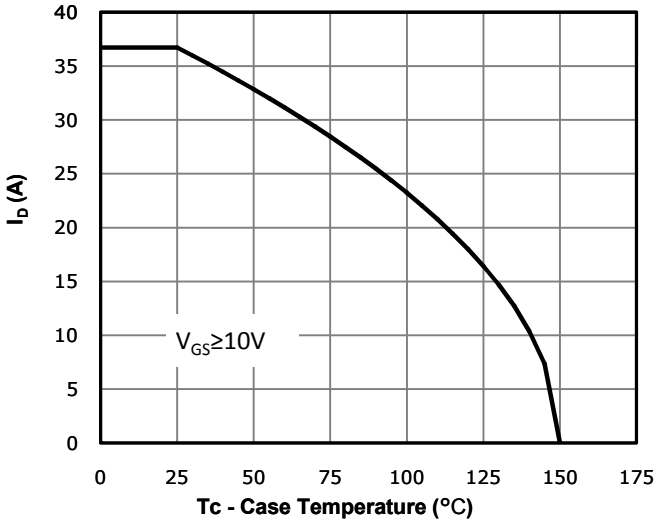

Fig 11: Safe Operating Area

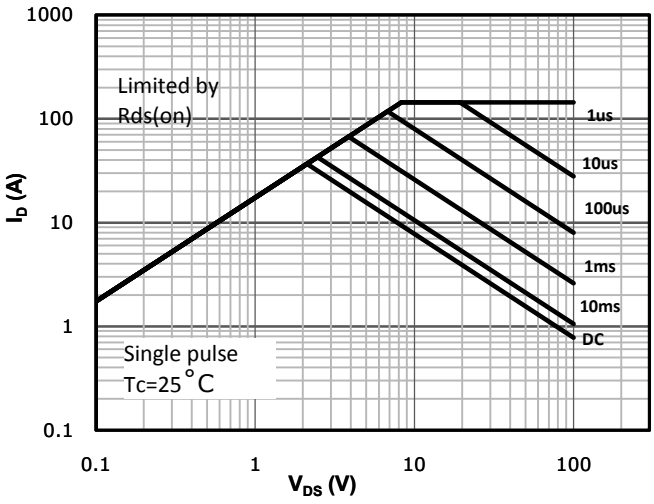

Fig 12: Max. Transient Thermal Impedance

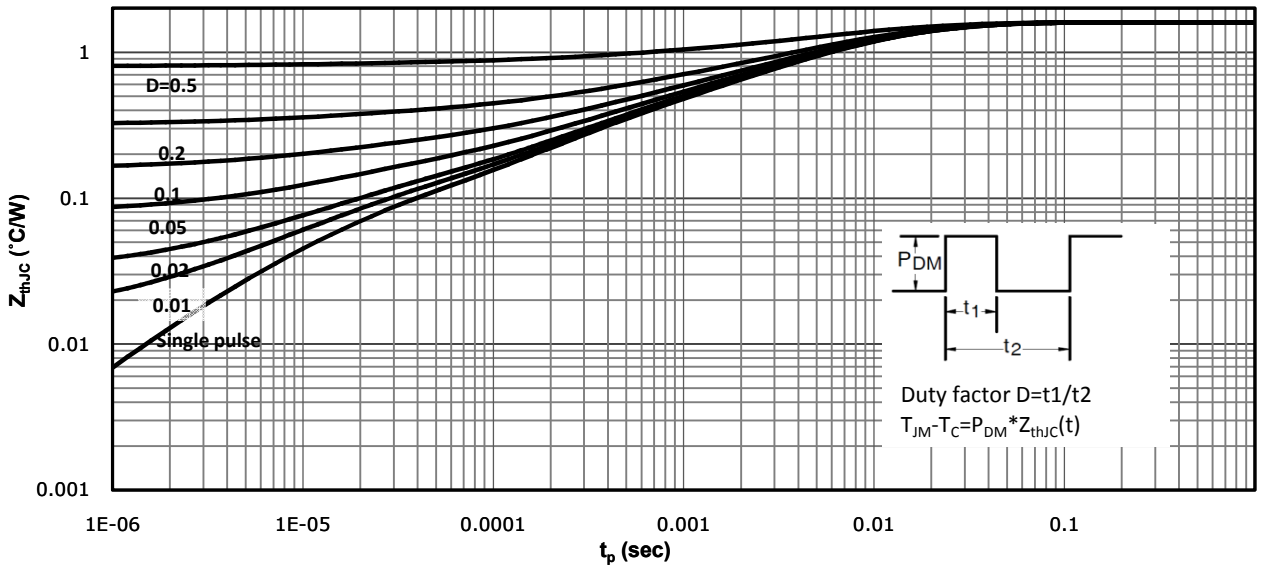

Test Circuit & Waveform

Gate Charge Test Circuit & Waveform

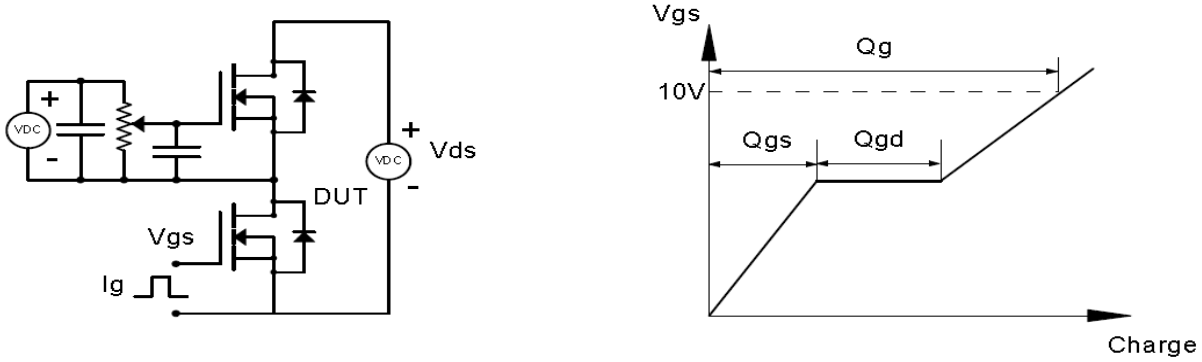

Resistive Switching Test Circuit & Waveforms

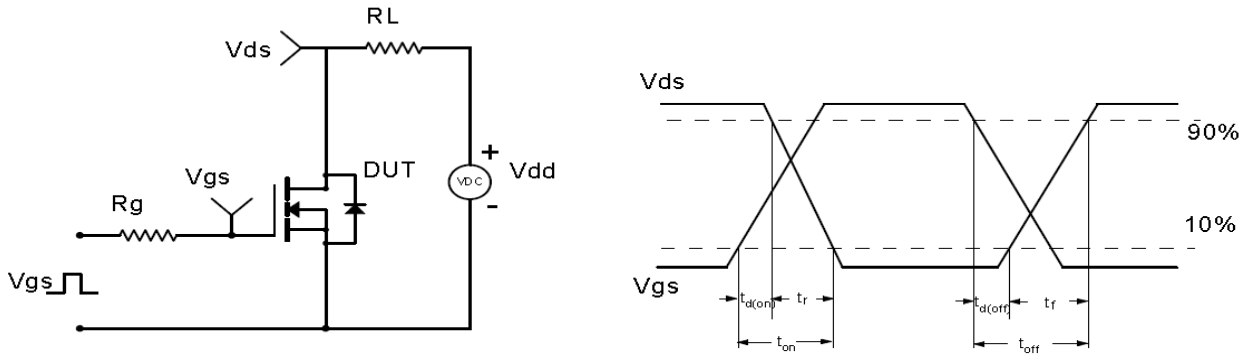

Unclamped Inductive Switching (UIS) Test Circuit & Waveforms

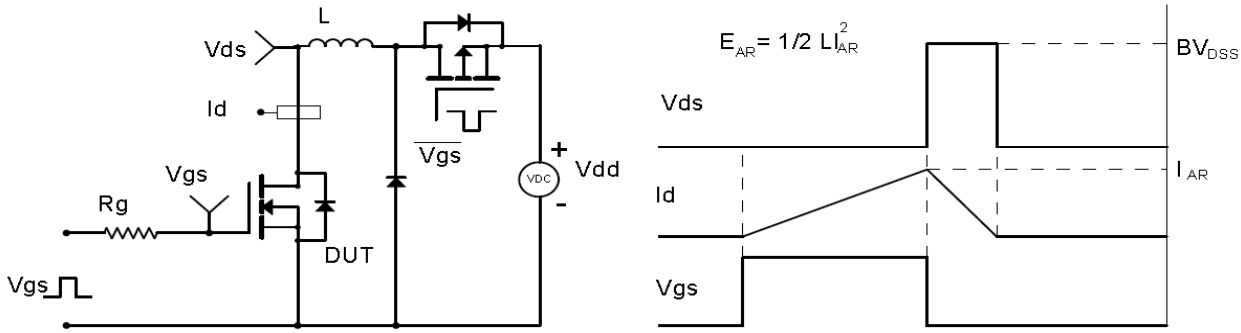

Diode Recovery Test Circuit & Waveforms

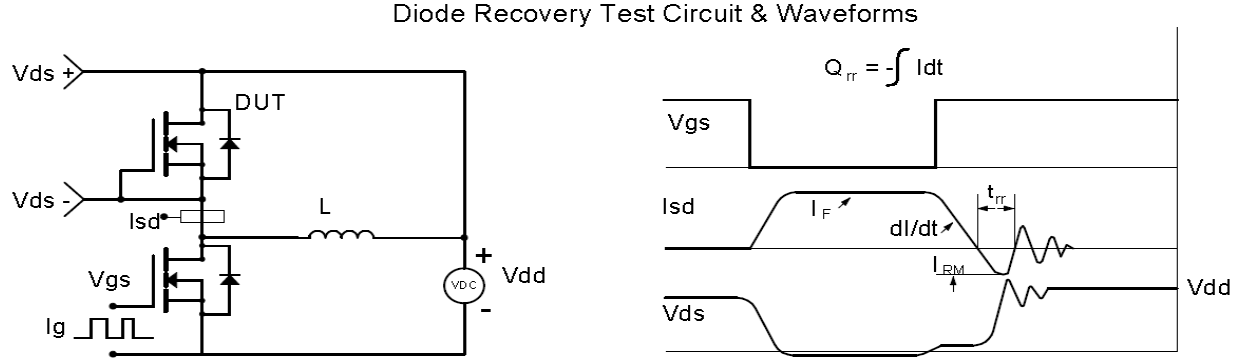

Package Outline: TO-220-3L

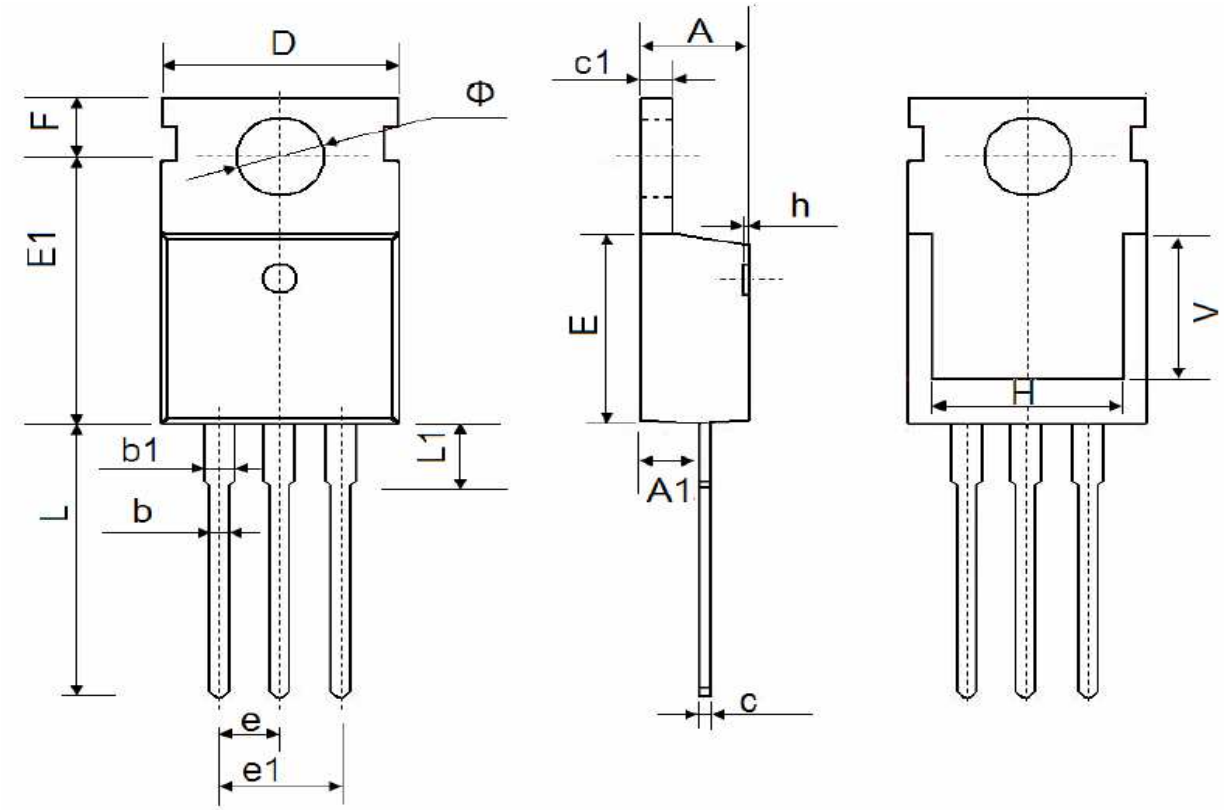

Symbol	Dimensions In Millimeters		Dimensions In Inches	
	Min.	Max.	Min.	Max.
A	4.30	4.80	0.169	0.189
A1	2.20	2.70	0.087	0.106
b	0.70	0.95	0.028	0.037
b1	1.10	1.50	0.043	0.059
c	0.40	0.65	0.016	0.026
c1	1.20	1.45	0.047	0.057
D	9.70	10.30	0.382	0.406
E	8.75	9.65	0.344	0.380
E1	12.50	13.10	0.492	0.516
e	2.540 Typ.		0.100 Typ.	
e1	4.98	5.18	0.196	0.204
F	2.60	3.00	0.102	0.118
H	7.00	8.40	0.276	0.331
h	0	0.3	0	0.012
L	12.75	13.90	0.502	0.547
L1	2.85	3.40	0.112	0.134
V	6.700Ref.		0.264Ref.	
Φ	3.50	3.80	0.138	0.150

Package Outline: TO-263

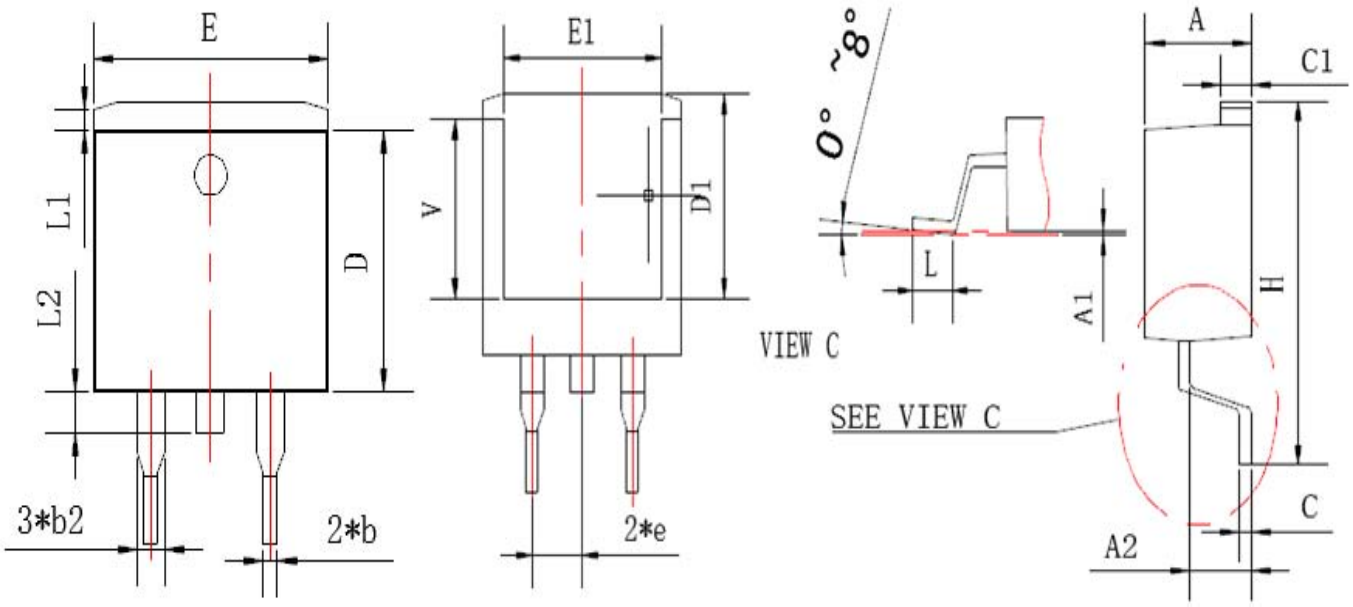

Symbol	Dimensions In Millimeters		Dimensions In Inches	
	Min.	Max.	Min.	Max.
A	4.30	4.80	0.169	0.189
A1	0.00	0.25	0.000	0.010
A2	2.35	2.70	0.093	0.106
b	0.70	0.94	0.028	0.037
b2	1.15	1.35	0.045	0.053
C	0.35	0.65	0.014	0.026
C1	1.20	1.40	0.047	0.055
D	8.40	9.40	0.331	0.370
D1	7.80	8.10	0.307	0.319
e	2.540 Typ.		0.100 Typ.	
E	9.85	10.30	0.388	0.406
E1	7.00	8.50	0.276	0.335
H	15.00	15.70	0.591	0.618
L	2.30	2.80	0.091	0.110
L1	0.90	1.30	0.035	0.051
V	6.700Ref.		0.264Ref	
L2	1.00	1.50	0.039	0.059

Revision History

Revison	Date	Major changes
1.0	2021-06-09	Release of formal version.

Disclaimer

Unless otherwise specified in the datasheet, the product is designed and qulified as a standard commercial product and is not intended for use in applications that require extraordinary levels of quality and reliability, such as automotive, aviation/aerospace and life-support devices or systems.

Any and all semicondutor products have certain probability to fail or malfunction, which may result in personal injury, death or property damage. Customer are solely responsible for providing adequate safe measures when design their systems.

Scilicon Electric reserves the right to improve product design,function and reliability without notice.