SFP055N95C3

N-MOSFET 98V, 4.9mΩ, 120A

Features

- Low on resistance
- Low gate charge
- Fast switching
- High avalanche current
- Low reverse transfer capacitances

Product Summary

V_{DS}	98V
$R_{DS(on)}$	4.9mΩ
I_D	120A

100% DVDS Tested

100% Avalanche Tested

RoHS

Application

- Brushed and BLDC Motor drive systems
- Battery Management
- DC/DC and AC/DC Converter
- UPS

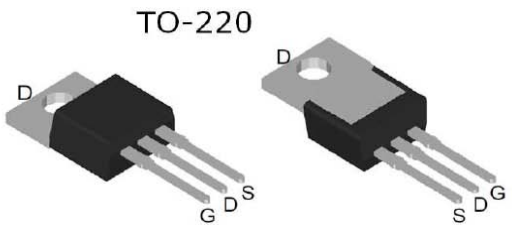

SFP055N95C3

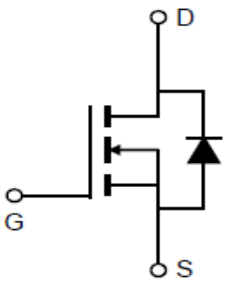

Package Marking and Ordering Information

Part #	Marking	Package	Packing	Reel Size	Tape Width	Qty
SFP055N95C3	055N95C3	TO-220	Tube	N/A	N/A	50pcs

Absolute Maximum Ratings

Parameter		Symbol	Value	Unit
Drain - Source Voltage		V_{DS}	98	V
Gate - Source Voltage		V_{GS}	±20	V
Continuous Drain Current	T_C = 25℃	I_D	120	A
	T_C = 100℃		90	
Pulsed Drain Current(Tc=25℃,t_p limited by T_{jmax})		$I_{D,Pulse}$	480	A
Single Pulsed Avalanche Energy(L=0.5mH,V_{DD}=50V,R_G=25Ω,T_J=25℃)		E_{AS}	400	mJ
Power Dissipation	T_C = 25℃	P_{tot}	160	W
Junction Temperature		T_J	150	℃
Storage Temperature		T_{STG}	-55 ~ 150	℃

Thermal Resistance

Parameter	Symbol	Max	Unit
Thermal resistance , junction – case	R_{thJC}	0.78	℃/W
Thermal resistance , junction – ambient(min. footprint)	R_{thJA}	62.5	℃/W

Electrical Characteristics (T_J = 25℃ unless otherwise noted)

Parameter	Symbol	Test Condition	Min	Type	Max	Unit
Static Characteristics						
Drain - Source Breakdown Voltage	BV_{DSS}	V_{GS} = 0V, I_D = 250μA	98	-	-	V
Zero Gate Voltage Drain Current	I_{DSS}	V_{DS} = 98V, V_{GS} = 0V T_C=25℃ T_C=125℃	- -	- -	1 100	μA
Gate - Body Leakage Current	I_{GSS}	V_{GS} = ±20V, V_{DS} = 0V	-	-	±100	nA
Gate Threshold Voltage	$V_{GS(th)}$	V_{DS} = V_{GS}, I_D = 250μA	2	3	4	V
Drain-source On-resistance	$R_{DS(on)}$	V_{GS} = 10V, I_D = 50A	-	4.9	5.7	mΩ
Dynamic Characteristics						
Input Capacitance	C_{iss}	V_{DS} = 40V, V_{GS} = 0V, f = 1MHz	-	3822	-	pF
Output Capacitance	C_{oss}		-	648	-	
Reverse Transfer Capacitance	C_{rss}		-	25	-	
Gate Resistance	R_g	V_{DS} = 0V, V_{GS} = 0V, f = 1MHz	-	3.0	-	Ω
Switching Characteristics						
Total Gate Charge	Q_g	V_{DS} = 40V, V_{GS} = 10V, I_D = 50A	-	64	-	nC
Gate-source Charge	Q_{gs}		-	23	-	
Gate-drain Charge	Q_{gd}		-	17	-	
Turn-on Delay Time	$t_{d(on)}$	V_{DD} = 40V, V_{GS} = 10V, I_D = 13.3A, R_G=24Ω	-	49	-	ns
Turn-on Rise Time	t_r		-	76	-	
Turn-off Delay Ttime	$t_{d(off)}$		-	157	-	
Turn-off Fall Time	t_f		-	87	-	

Body Diode Characteristic

Parameter	Symbol	Test Condition	Min	Type	Max	Unit
Diode continous forward current	I_S	-	-	-	120	A
Diode pulse current	$I_{S,pulse}$	Pulsed, tp ≤ 10 μs	-	-	480	A
Body Diode Forward Voltage	V_{SD}	V_{GS} = 0V,I_{SD} = 20A	-	-	1.4	V
Body Diode Reverse Recovery Time	T_{rr}	I_F=20A,di/dt=100A/μs	-	66	-	ns
Body Diode Reverse Recovery Charge	Q_{rr}	I_F=20A,di/dt=100A/μs	-	150	-	nC

Typical Performance Characteristics

Output Characteristics

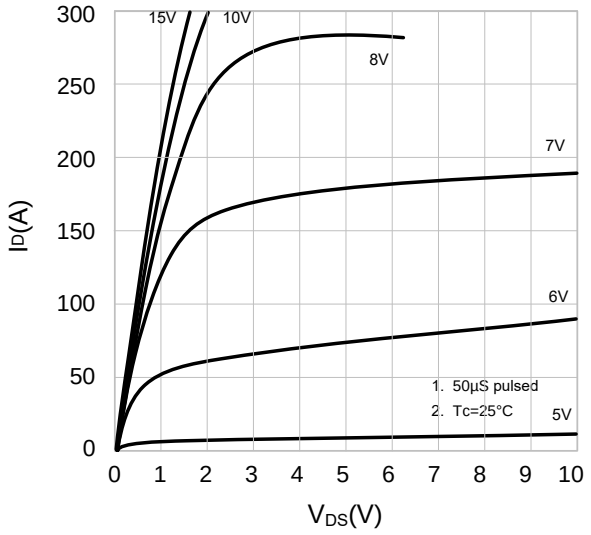

Transfer Characteristics

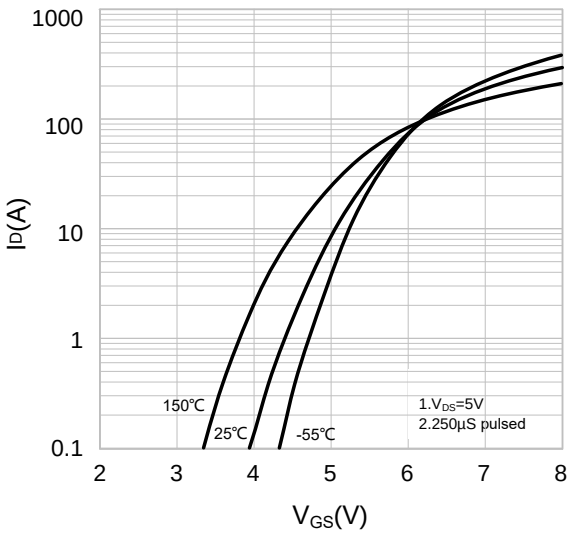

RDS(on) vs Drain Current

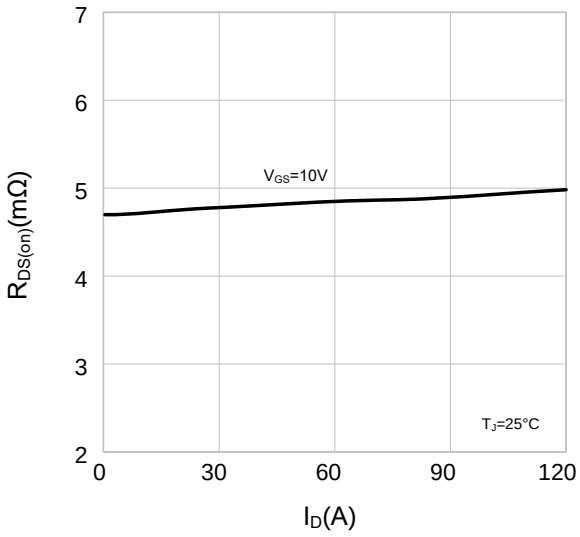

Body-diode Forward Characteristics

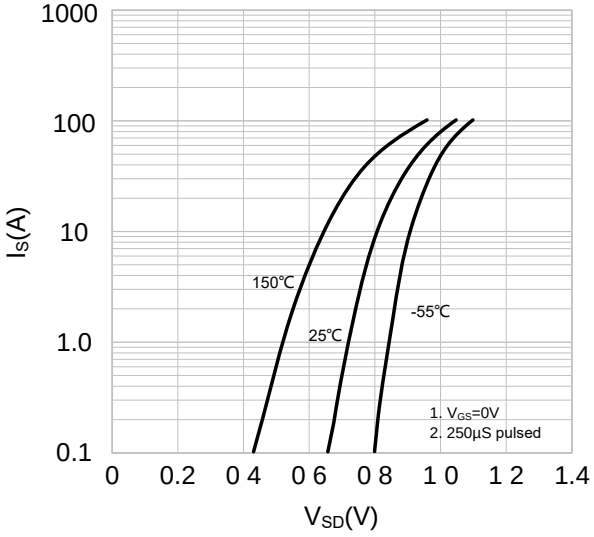

Capacitance Characteristics

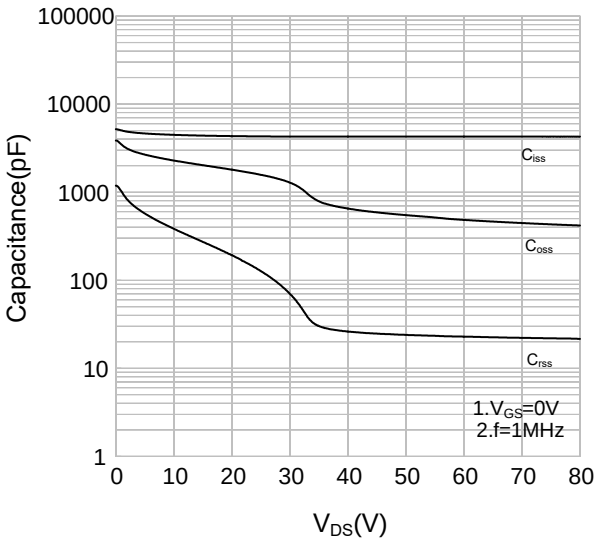

Gate Charge Characteristics

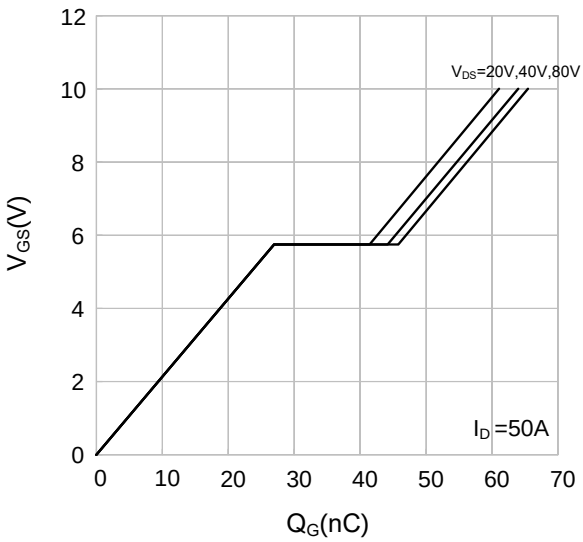

Typical Breakdown Voltage vs Junction Temperature

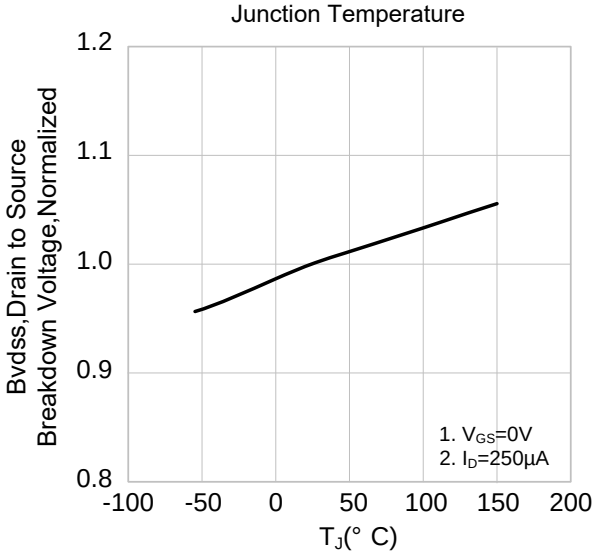

$R_{DS(on)}$ vs. Temperature

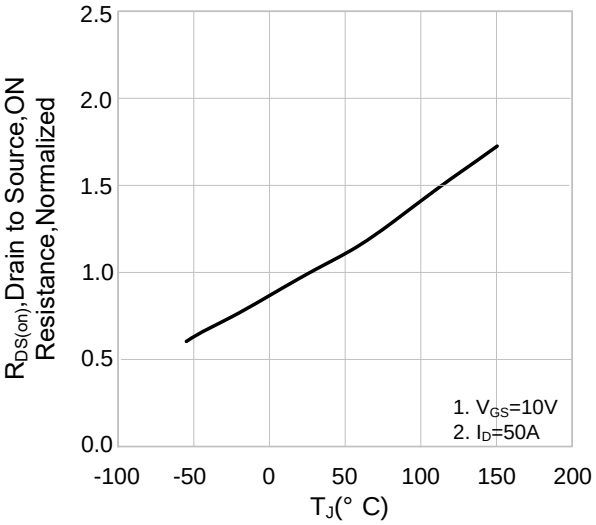

Safe Operating Area

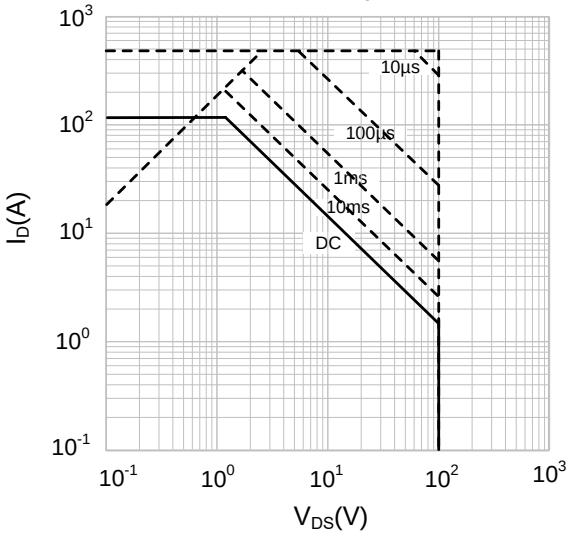

Test Circuit & Waveform

Gate Charge Test Circuit & Waveform

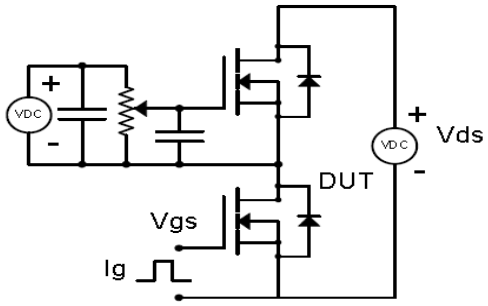

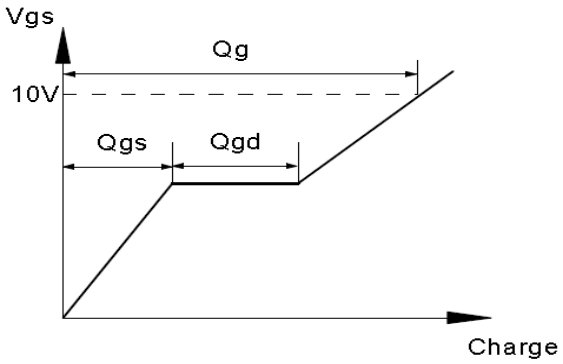

Resistive Switching Test Circuit & Waveforms

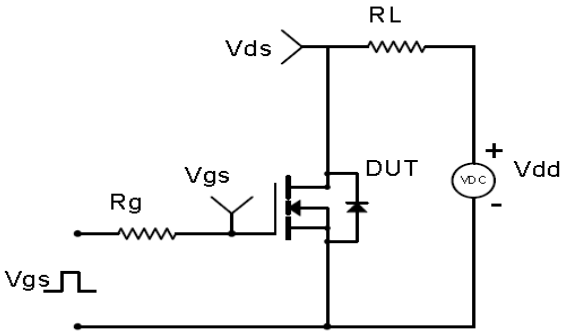

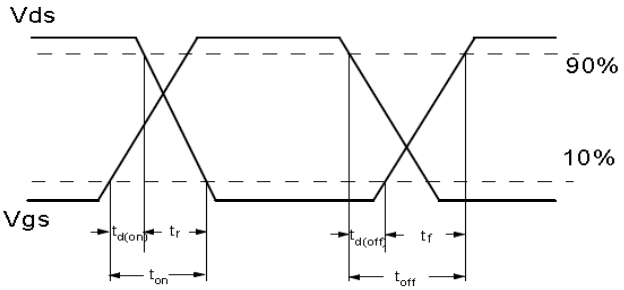

Unclamped Inductive Switching (UIS) Test Circuit & Waveforms

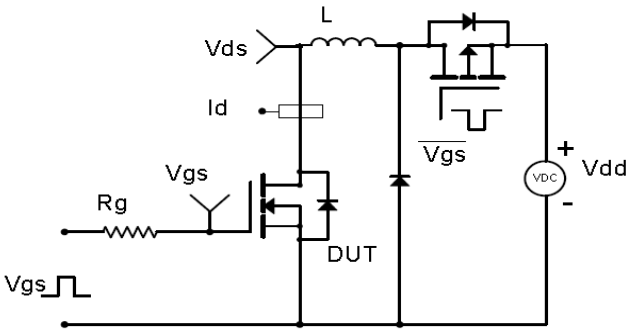

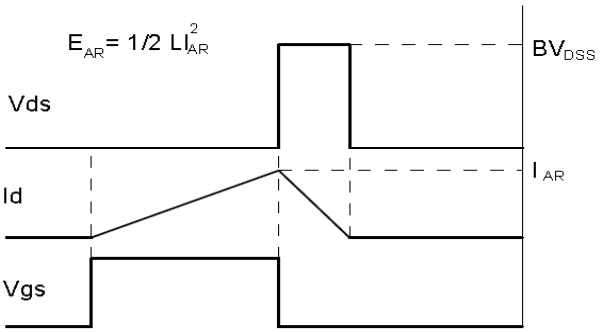

Diode Recovery Test Circuit & Waveforms

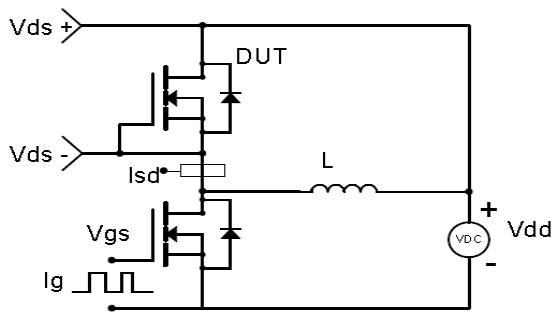

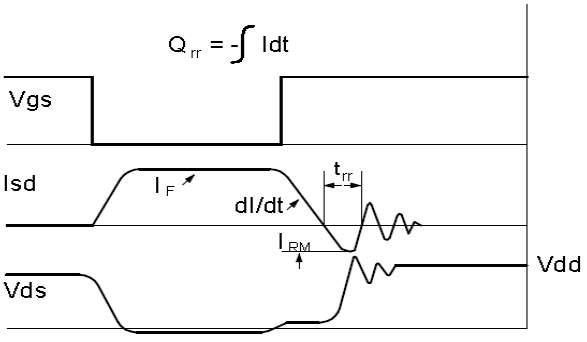

Package Outline: TO-220-3L

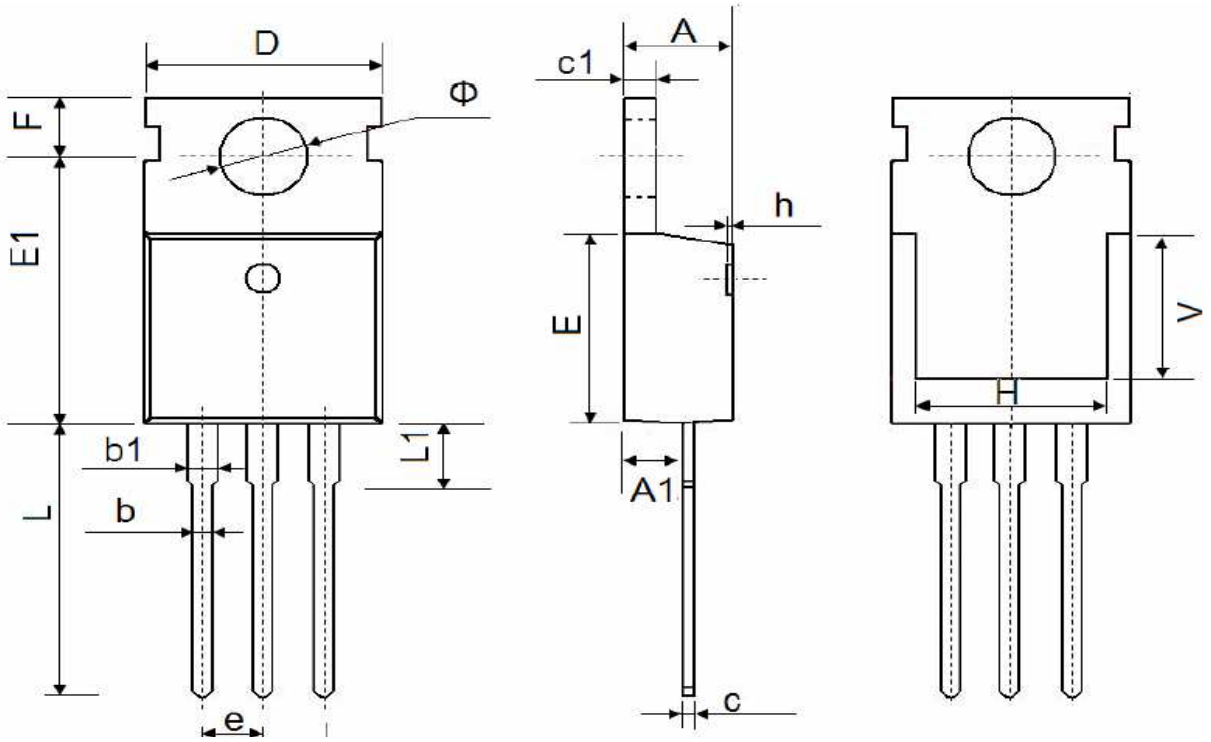

Symbol	Dimensions In Millimeters		Dimensions In Inches	
	Min.	Max.	Min.	Max.
A	4.30	4.80	0.169	0.189
A1	2.20	2.70	0.087	0.106
b	0.70	0.95	0.276	0.037
b1	1.10	1.50	0.043	0.059
c	0.40	0.65	0.016	0.026
c1	1.20	1.45	0.047	0.057
D	9.70	10.30	0.382	0.406
E	8.75	9.65	0.344	0.380
E1	12.50	13.10	0.492	0.516
e	2.540 Typ.		0.100 Typ.	
e1	4.98	5.18	0.196	0.204
F	2.60	3.00	0.102	0.118
H	7.00	8.40	0.276	0.331
h	0	0.3	0	0.012
L	12.75	13.90	0.502	0.547
L1	2.85	3.40	0.112	0.134
V	6.700Ref.		0.264Ref.	
Φ	3.50	3.80	0.138	0.150

Revision History

Revision	Date	Major Changes
1.0	2023-3-26	Release of formal version
1.1	2023-5-22	Update $R_{DS(on)}$ and Performance Characteristics

Disclaimer

Unless otherwise specified in the datasheet, the product is designed and qulified as a standard commercial product and is not intended for use in applications that require extraordinary levels of quality and reliability, such as automotive, aviation/aerospace and life-support devices or systems.

Any and all semicondutor products have certain probability to fail or malfunction, which may result in personal injury, death or property damage. Customer are solely responsible for providing adequate safe measures when design their systems.

Scilicon Electric reserves the right to improve product design,function and reliability without notice.