CMH072N15/CMA072N15

150V, 6.2mΩ typ., 160A N-Channel MOSFET

General Description

The 072N15 uses advanced SGT technology to provide excellent RDS(ON).This device is suitable for use as a Battery protection or in other Switching application.

Product Summary

BVDSS	$R_{DS(on)}$ max.	ID
150V	7mΩ	160A

Applications

- Motor control and drive
- Battery management
- Uninterrupible Power Supplies

Features

- Low On-Resistance
- 100% avalanche tested
- RoHS Compliant

TO-247/TO-3P Pin Configuration

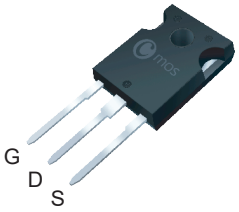

TO-247
CMH072N15

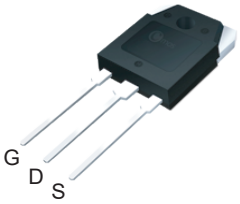

TO-3P
CMA072N15

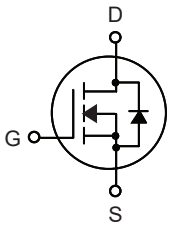

Absolute Maximum Ratings

Symbol	Parameter	Rating	Units
V_{DS}	Drain-Source Voltage	150	V
V_{GS}	Gate-Source Voltage	±20	V
I_D@T_C=25℃	Continuous Drain Current	160	A
I_D@T_C=100℃	Continuous Drain Current	110	A
I_{DM}	Pulsed Drain Current	640	A
EAS	Single Pulse Avalanche Energy (Note 1)	3645	mJ
P_D@T_C=25℃	Total Power Dissipation	380	W
T_{STG}	Storage Temperature Range	-55 to 150	℃
T_J	Operating Junction Temperature Range	-55 to 150	℃

Thermal Data

Symbol	Parameter	Typ.	Max.	Unit
$R_{\theta JA}$	Thermal Resistance Junction-ambient(min. footprint)	---	45	℃/W
$R_{\theta JC}$	Thermal Resistance Junction-case	---	0.33	℃/W

Electrical Characteristics (T_J=25℃ , unless otherwise noted)

Symbol	Parameter	Conditions	Min.	Typ.	Max.	Unit
BV_{DSS}	Drain-Source Breakdown Voltage	V_{GS}=0V , I_D=250uA	150	---	---	V
$R_{DS(ON)}$	Static Drain-Source On-Resistance	V_{GS}=10V , I_D=60A	---	6.2	7	mΩ
$V_{GS(th)}$	Gate Threshold Voltage	V_{GS}=V_{DS} , I_D =250μA	2	---	4	V
I_{DSS}	Drain-Source Leakage Current	V_{DS}=150V , V_{GS}=0V	---	---	1	uA
I_{GSS}	Gate-Source Leakage Current	V_{GS}= ±20V , V_{DS}=0V	---	---	±100	nA
gfs	Forward Transconductance	V_{DS}=10V , I_D =20A	---	46	---	S
R_g	Gate Resistance	V_{DS}=0V , V_{GS}=0V , f=1MHz	---	3.4	---	Ω
Q_g	Total Gate Charge	V_{DD} =75V , I_D=60A V_{GS}=10V	---	79	---	nC
Q_{gs}	Gate-Source Charge		---	31	---	
Q_{gd}	Gate-Drain Charge		---	17	---	
$T_{d(on)}$	Turn-On Delay Time	V_{DS}=75V , V_{GS} =30A R_{G_ext} =2.7Ω	---	22	---	ns
T_r	Rise Time		---	106	---	
$T_{d(off)}$	Turn-Off Delay Time		---	57	---	
T_f	Fall Time		---	102	---	
C_{iss}	Input Capacitance	V_{DS}=25V , V_{GS}=0V , f=1MHz	---	5300	---	pF
C_{oss}	Output Capacitance		---	3500	---	
C_{rss}	Reverse Transfer Capacitance		---	150	---	

Diode Characteristics

Symbol	Parameter	Conditions	Min.	Typ.	Max.	Unit
I_S	Continuous Source Current	V_G=V_D=0V , Force Current	---	---	160	A
I_{SM}	Pulsed Source Current		---	---	640	A
V_{SD}	Diode Forward Voltage	V_{GS}=0V , I_S=60A ,T_J=25℃	---	0.86	1.4	V
t_{rr}	Reverse Recovery Time	di/dt = 100A/μs	---	133	---	ns
Q_{rr}	Reverse Recovery Charge	V_{DS}=100V , I_F =60A (Note 2,3)	---	585	---	nC

Note :

1. The EAS data shows Max. rating .The test condition is V_{DS} =80V , V_{GS}=10V , L=10mH , I_{AS}=27A.
2. Pulse test: Pulse width≤300us, Duty cycle≤2%.
3. Essentially independent of operating temperature typical characteristics.

This product has been designed and qualified for the counsumer market.
Cmos assumes no liability for customers' product design or applications.
Cmos reserver the right to improve product design ,functions and reliability wihtout notice.Please refer to the latest version of specification.

Typical Characteristics

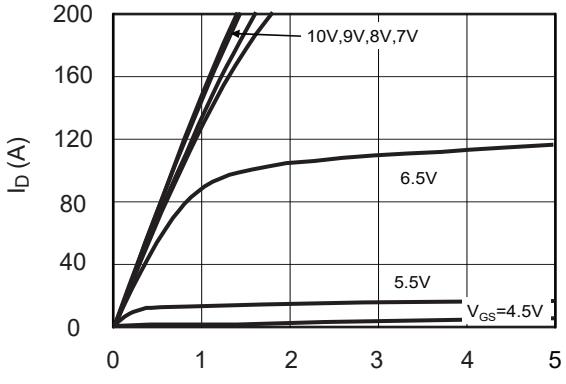

Output Characteristics

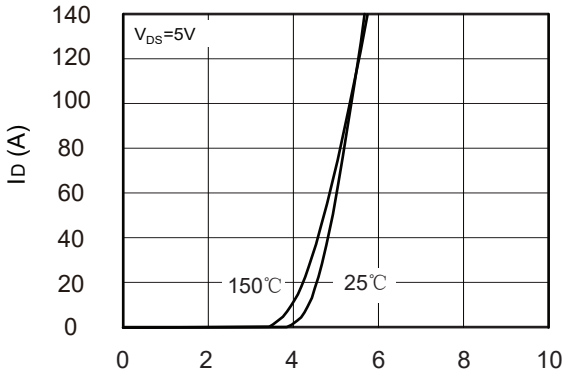

transfer characteristics

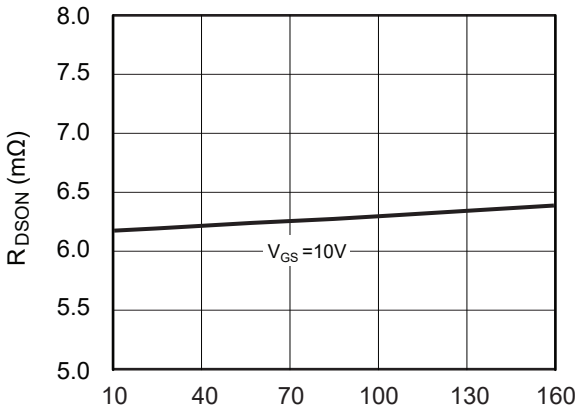

drain-source on-resistance

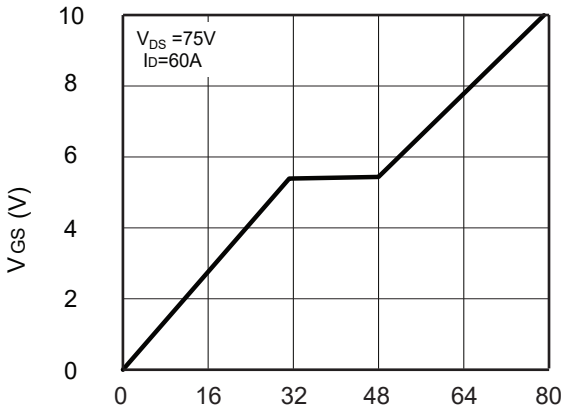

Gate charge vs gate-source voltage

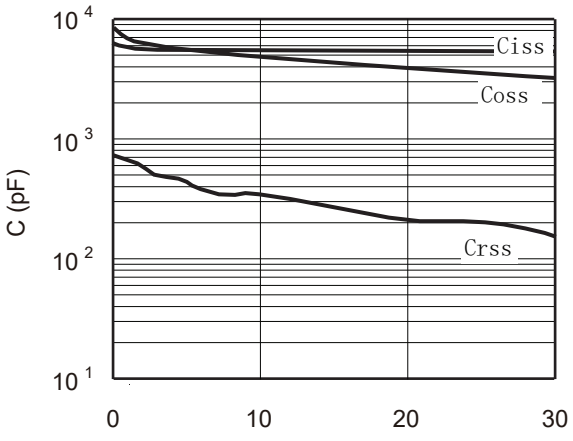

Capacitance Characteristics

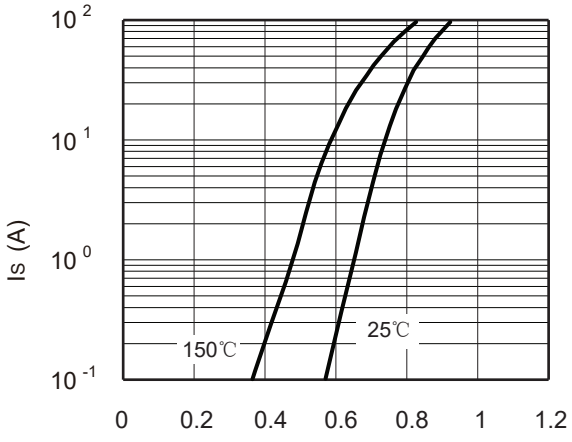

Body-Diode Characteristics

Package Dimension

TO-247 Unit :mm

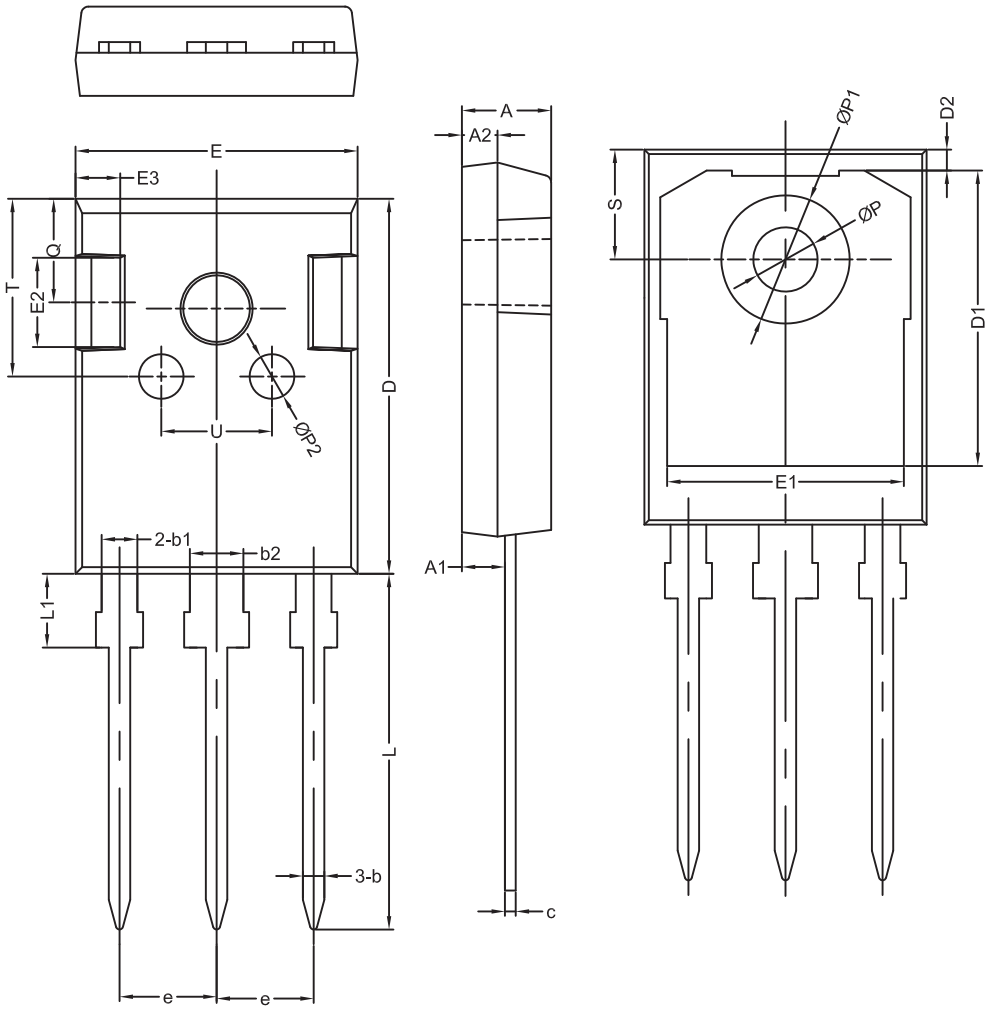

符号	机械尺寸/mm			符号	机械尺寸/mm		
	最小值	典型值	最大值		最小值	典型值	最大值
A	4.80	5.00	5.20	E2		5.00	
A1	2.21	2.41	2.61	E3		2.50	
A2	1.90	2.00	2.10	e		5.44	
b	1.10	1.20	1.35	L	19.42	19.92	20.42
b1		2.00		L1		4.13	
b2		3.00		P	3.50	3.60	3.70
c	0.55	0.60	0.75	P1		7.19	
D	20.80	21.00	21.20	P2		2.50	
D1		16.55		Q		5.80	
D2		1.20		S	6.05	6.15	6.25
E	15.60	15.80	16.0	T		10.00	
E1		13.30		U		6.20	

Package Dimension

TO-3P Unit :mm

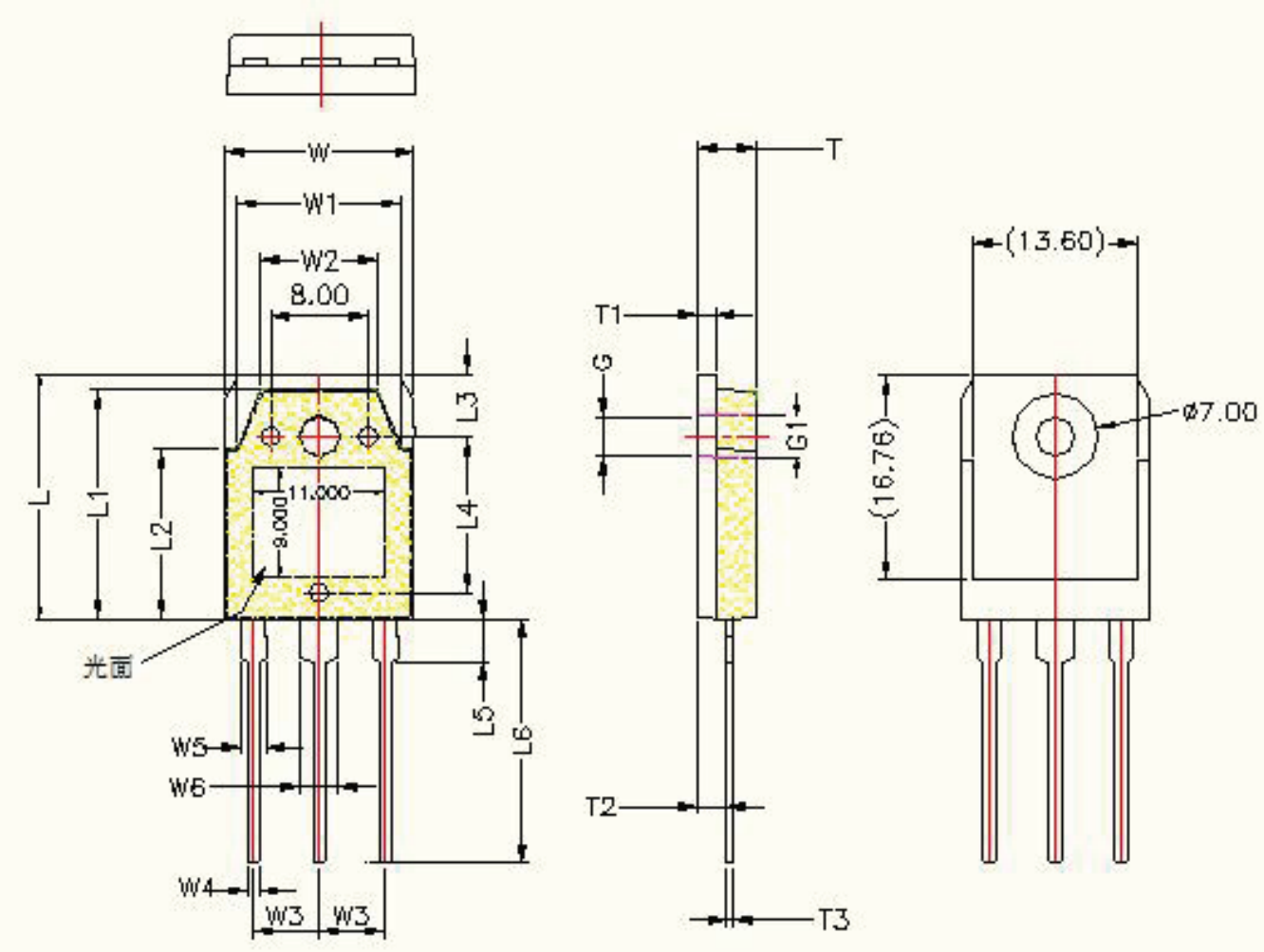

Symbol	Dimensions	Symbol	Dimensions	Symbol	Dimensions
W	15.60±0.3	L	19.90±0.3	T	4.80±0.3
W1	13.60±0.3	L1	18.70±0.3	T1	1.50±0.3
W2	9.60±0.3	L2	13.90±0.3	T2	2.40±0.3
W3	5.45(TYP)	L3	5.00±0.3	T3	0.60±0.3
W4	1.00±0.3	L4	12.76±0.3	G	Ø3.25±0.3
W5	2.10±0.2	L5	3.50±0.3	G1	Ø3.58±0.3
W6	3.10±0.2	L6	20.00±0.3		