MSKSEMI 美森科
SEMICONDUCTOR

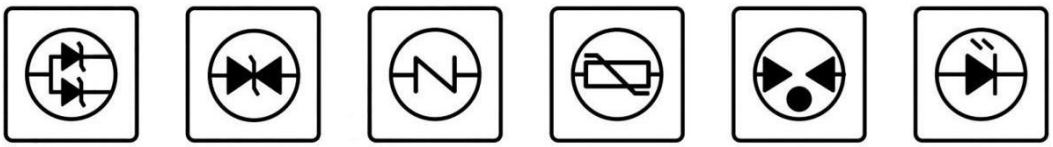

MSLM317LIxx

Product specification

Description

The MSLM317LIxx is a 3-terminal adjustable positive voltage regulator capable of supplying in excess of 1 00mA over an output voltage range of 1.2V to 37V.

This voltage regulator is exceptionally easy to use a nd requires only two external resistors to set the out put voltage.

Features

- Output Current in Excess of 100mA
- Output Adjustable Between 1.2V and 37V
- Internal Thermal Overload Protection
- Internal Short Circuit Current Limiting
- Output Transistor Safe Area Compensation
- Floating Operation For High Voltage Applications

Reference News

Type No	TO-92	PIN DESCRIPTION	MARKING
MSLM317LILP	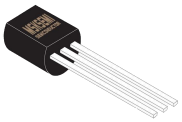	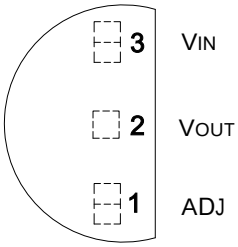	LM317L ***

Type No	SOT-89	PIN DESCRIPTION	MARKING
MSLM317LIPK	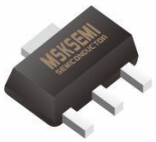	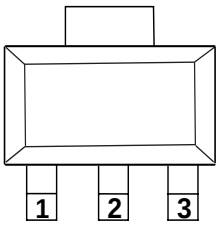	LM317L MS**

PIN DESCRIPTION

PIN No.		Name	Functions Description
TO-92	SOT-89		
1	1	ADJ	Adjustable
2	2	VOUT	Output Voltage
3	3	VIN	Input Voltage

ORDER INFORMATION

P/N	PKG	QTY
MSLM317LILP	TO-92	1000
MSLM317LIPK	SOT-89	1000

Copyright© Msksemi Incorporated

Absolute Maximum Ratings

Parameter	Symbol	Value	Unit
Input-Output Voltage Differential	VI - VO	40	V
Power Dissipation	PD	Internally limited	W
Operating Junction Temperature Range	Tj	0 ~ +125	°C
Storage Temperature Range	TSTG	-65 ~+125	°C

Electrical Characteristics

(VI - VO = 5V, IO = 40mA, 0°C ≤ TJ ≤ +125°C, PDMAX = 625mW, unless otherwise specified)

Parameter	Symbol	Conditions	Min.	Typ.	Max.	Unit
*Line Regulation	Rline	TA = +25°C 3V ≤ VI − VO ≤ 40V	-	0.01	0.04	%/V
		3V ≤ VI − VO ≤ 40V	-	0.02	0.07	
*Load Regulation	Rloal	TA = +25°C 10mA ≤ IO ≤100mA VO ≤ 5V VO ≥5V	-	5 0.1	25 0.5	mV %/ VO
		10mA ≤ IO ≤ 100mA VO ≤ 5V VO ≥ 5V	-	20 0.3	70 1.5	mV %/ VO
Adjustment Pin Current	IADJ	-	-	50	100	μA
Adjustment Pin Current Change	ΔIADJ	3V ≤ VI - VO ≤ 40V 10mA ≤ IO ≤ 100mA PD < PDMAX	-	0.2	5	μA
Reference Voltage	VREF	3V < VI - VO <40V 10mA ≤ IO ≤100mA PD ≤ PDMAX	1.20	1.25	1.30	V
Temperature Stability	STT	-	-	0.7	-	%
Minimum Load Current to Maintain Regulation	IL(MIN)	VI - VO = 40V	-	3.5	10	mA
Maximum output Current	IO(MAX)	VI - VO ≤ 15V, PD < PDMAX	100	200	-	mA
		VI - VO ≤ 40V PD < PDMAX, TA = +25°C	25	50	-	
RMS Noise, % of VOUT	eN	TA =+ 25°C, 10Hz < f <10KHz	-	0.003	-	%/ VO
Ripple Rejection	RR	VO = 10V, f = 120Hz without CADJ CADJ = 10uF	66	65 80	-	dB
Long-Term Stability	ST	TJ = +125 °C, 1000 Hours	-	0.3	-	%

Load and Line regulation are specified at constant junction temperature. Change in VO due to heating effects must be taken into account separately. Pulse testing with low duty cycle is used.

Copyright© Msksemi Incorporated

Typical Application

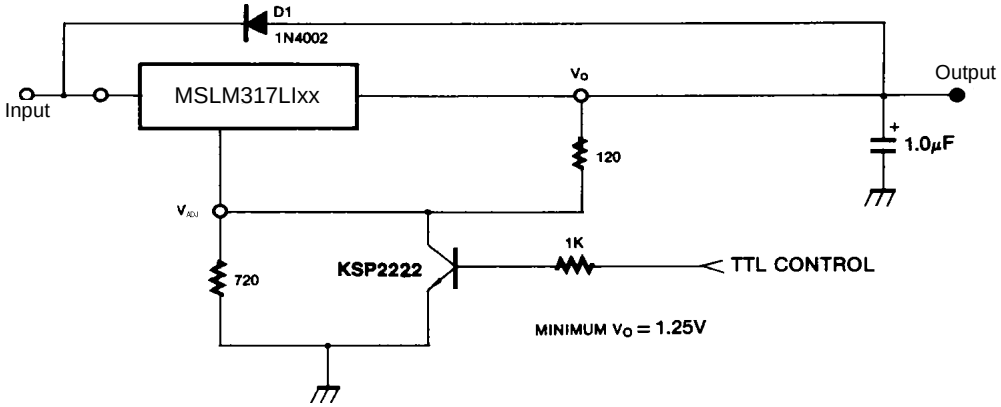

Figure 1. 5V Electronic Shutdown Regulator

D1 protects the device during an input short circuit.

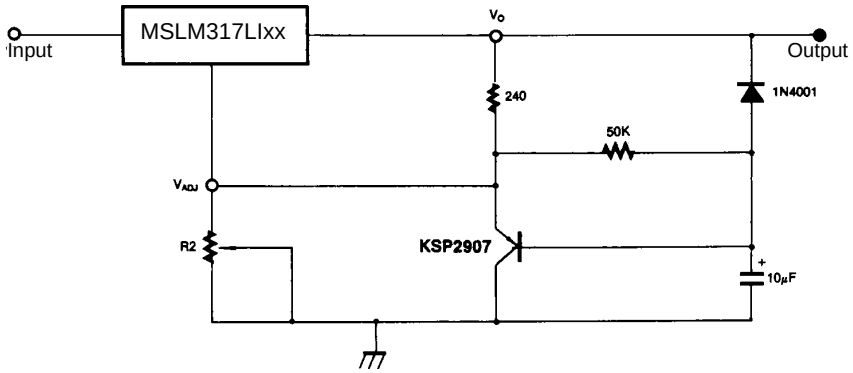

Figure 2. Slow Turn-On Regulator

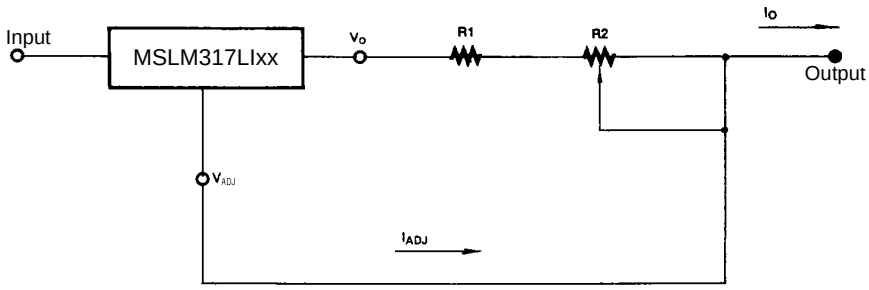

$$I_{OMAX} = \left(\frac{V_{REF}}{R1}\right) + I_{ADJ} \cong \frac{1.25V}{R1}$$

$$I_{OMIN} = \left(\frac{V_{REF}}{R1 + R2}\right) + I_{ADJ} \cong \frac{1.25V}{R1 + R2}$$

$$5mA < I_O < 500mA$$

Figure 3. Current Regulator

Copyright© Msksemi Incorporated

TO-92

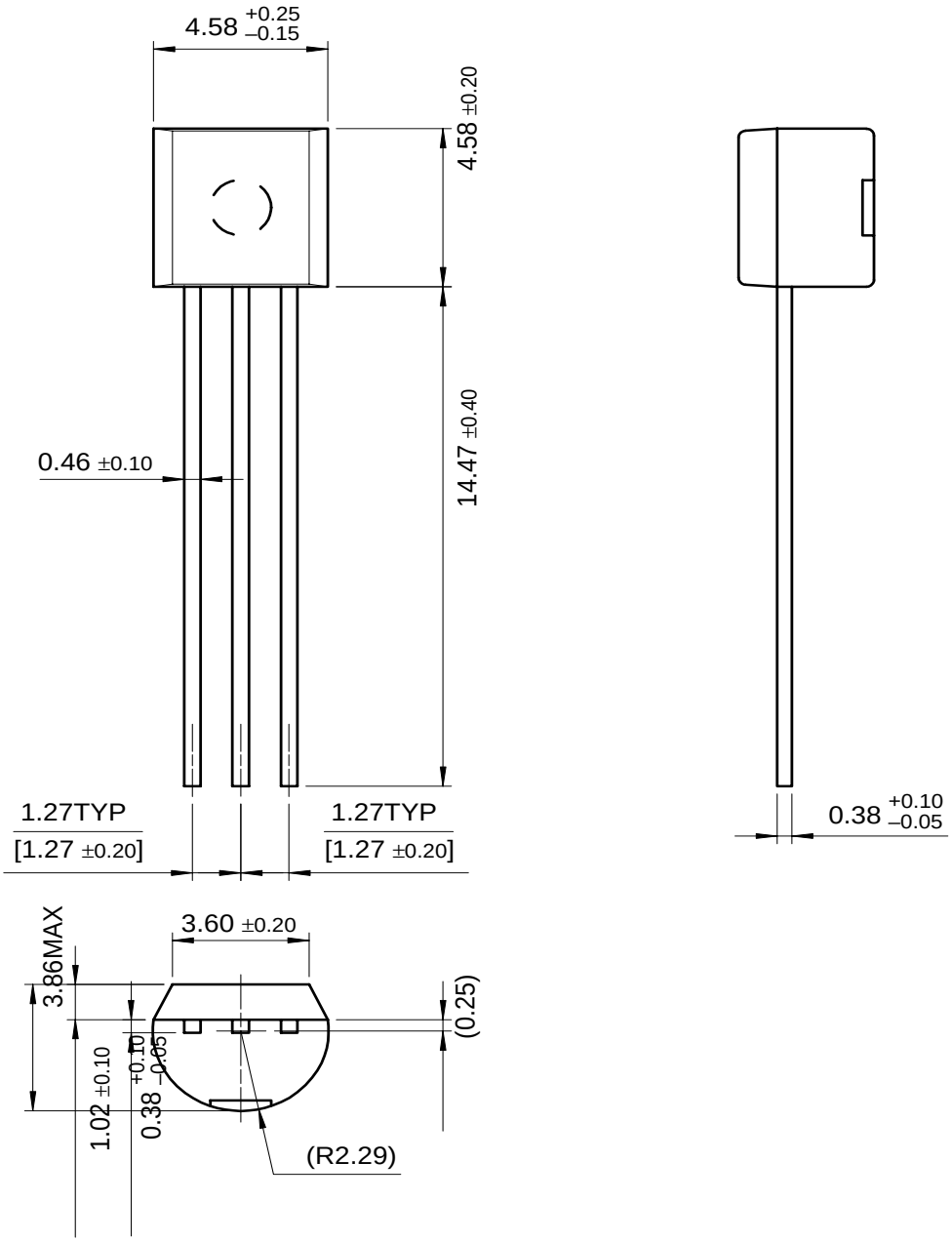

Copyright© Msksemi Incorporated

SOT-89

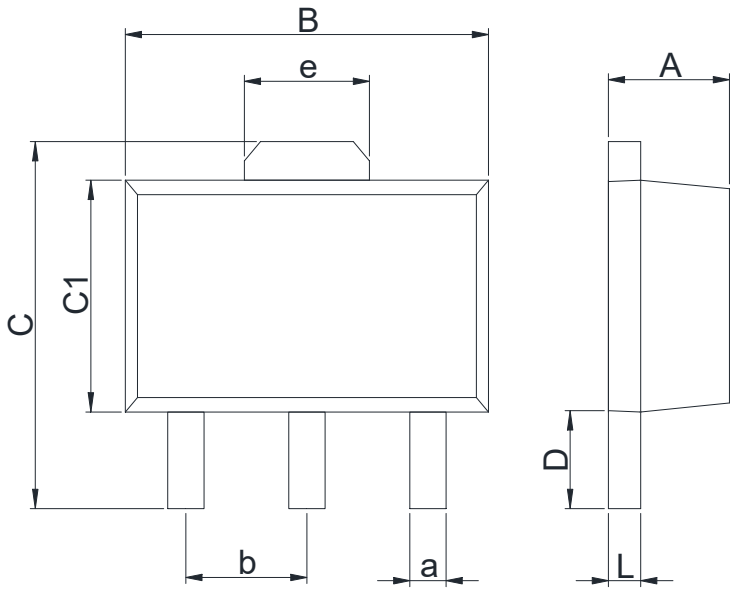

Dimensions In Millimeters(SOT-89-3)									
Symbol:	A	B	C	C1	D	L	a	b	e
Min:	1.40	4.40	3.94	2.30	0.90	0.35	0.40	1.50	1.55
Max:	1.60	4.60	4.25	2.60	1.20	0.44	0.50	BSC	BSC

Copyright© Msksemi Incorporated

Attention

■ Any and all MSKSEMI Semiconductor products described or contained herein do not have specifications that can handle applications that require extremely high levels of reliability, such as life-support systems, aircraft's control systems, or other applications whose failure can be reasonably expected to result in serious physical and/or material damage. Consult with your MSKSEMI Semiconductor representative nearest you before using any MSKSEMI Semiconductor products described or contained herein in such applications.

■ MSKSEMI Semiconductor assumes no responsibility for equipment failures that result from using products at values that exceed, even momentarily, rated values (such as maximum ratings, operating condition ranges, or other parameters) listed in products specificationsof any andall MSKSEMI Semiconductor products described orcontained herein.

■ Specifications of any and all MSKSEMI Semiconductor products described or contained herein stipulate the performance, characteristics, and functions of the described products in the independent state, and are not guarantees of the performance, characteristics, and functions of the described products as mounted in the customer's products or equipment. To verify symptoms and states that cannot be evaluated in an independent device, the customer should always evaluate and test devices mounted in the customer'sproducts orequipment.

■ MSKSEMI Semiconductor. strives to supply high-quality high-reliability products. However, any and all semiconductor products fail with someprobability. It is possiblethat these probabilistic failures could give rise to accidents or events that could endanger human lives, that could give rise to smoke or fire, or that could cause damage to other property. When designing equipment, adopt safety measures so that these kinds of accidents or events cannot occur. Such measures include but are not limited to protective circuits anderror prevention circuitsfor safedesign, redundant design, and structural design.

■ In the event that any or all MSKSEMI Semiconductor products(including technical data, services) described or contained herein are controlled under any of applicable local export control laws and regulations, such products must not be exported without obtaining the export license from theauthorities concerned in accordance with the above law.

■ No part of this publication may be reproduced or transmitted in any form or by any means, electronic or mechanical, including photocopying and recording, or any information storage or retrieval system, or otherwise, without the prior written permission of MSKSEMI Semiconductor.

■ Information (including circuit diagrams and circuit parameters) herein is for example only ; it is not guaranteed for volume production. MSKSEMI Semiconductor believes information herein is accurate and reliable, but no guarantees are made or implied regarding its use or any infringementsof intellectual property rights or other rightsof third parties.

■ Any and all information described or contained herein are subject to change without notice due to product/technology improvement, etc. Whendesigning equipment, referto the "Delivery Specification" for the MSKSEMI Semiconductor productthat you intend to use.

Copyright© Msksemi Incorporated