RoHS

REVISIONS					
REV.	ECN NO.	LOCATION	DESCRIPTION	DATE	DESIGN
A0	N/A		INITIAL RELEASE	2025.05.28	

Specifications(规格)：
1.Impedance(特性阻抗)：50Ω；
2.Frequency（工作频率）：DC~6GHz;
3.VSWR（电压驻波比）：1.50@3GHz；1.60@6GHz；.
4.Insulation resistance(绝缘阻抗)：≥100MΩ；
5.Dielectric withstand voltage（介质耐电压）：800V AC；
6.Mating cycles（耐久性）：≥25 cycles；
7.Retention force latch(保持力)：≥110N；
8.Temperature range(使用温度)：-40℃~+105℃;

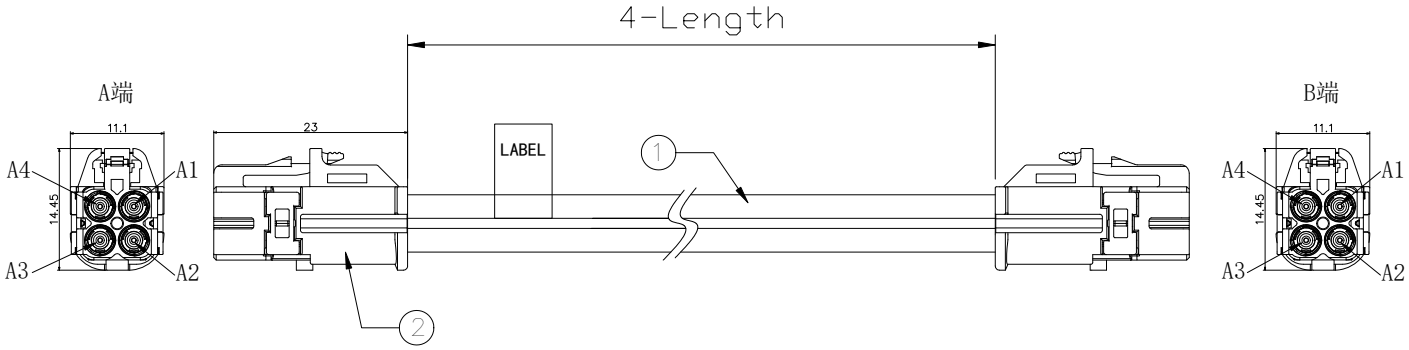

PART NO.:

X Z X T X - M4F-XXXX-M4F- X X
① ② ③ ④ ⑤

① Cable TYPE:
3: RG174
4: 1.5DS
7: Dacar302
8: RG174LL

② Successive number: 1~Z

③ Length (mm): 1000=1000mm

④ Coding A: A~Z

⑤ Coding B (B1~B4): A~Z

接 点 表(Wiring Table)

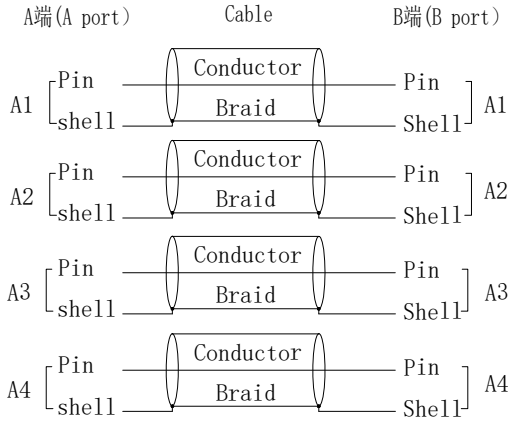

PART NO.	Length (mm/inch)	TOLERANCES (mm/inch)
XZ7T1-M4F-1000-M4F-ZZ	1000 [39.370]	±15 [0.591]
XZ7T1-M4F-1500-M4F-ZZ	1500 [59.055]	±15 [0.591]
XZ7T1-M4F-2000-M4F-ZZ	2000 [78.740]	±20 [0.787]
XZ7T1-M4F-3000-M4F-ZZ	3000 [118.110]	±30 [1.181]
XZ7T1-M4F-4000-M4F-ZZ	4000 [157.480]	±60 [2.362]

NO.	NAME	SPEC.	Q'TY	NOTE
2	Connector	MINI FAKRA female connector(T),Z Code	2SET	
1	Cable	RTK031 Cable PVC OD3.30 Black,-40~105℃	4PCS	

XKB 星坤 Connection

DESIGN	希 文	VIEW:	MODEL TYPE: Assembly cable, MINI FAKRA series
CHECKED		UNIT: mm/in	PART NO.: XZ7T1-M4F-XXXX-M4F-ZZ
APPROVED		SIZE: A4	DWG NO.: X-XZ7T1-M4F-XXXX-M4F-ZZ

XKB INDUSTRIAL PRECISION CO.,LIMITED

SCALE	PAGE	REVISION
N/A	1/1	A0