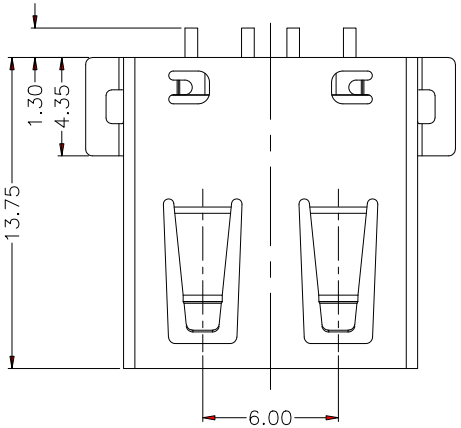

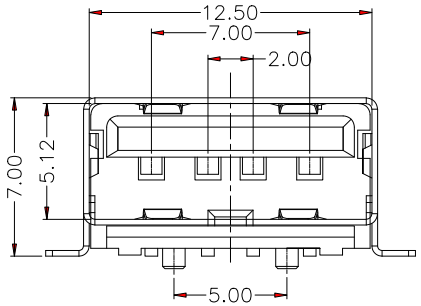

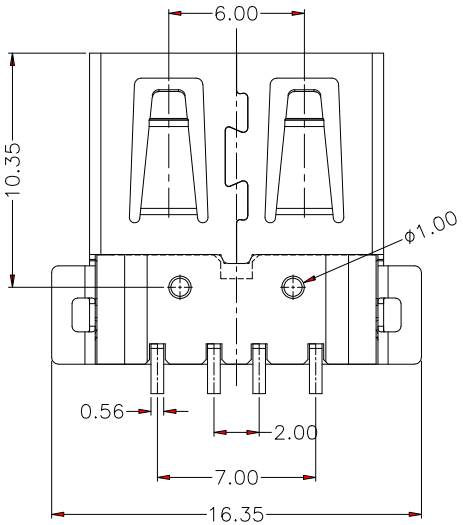

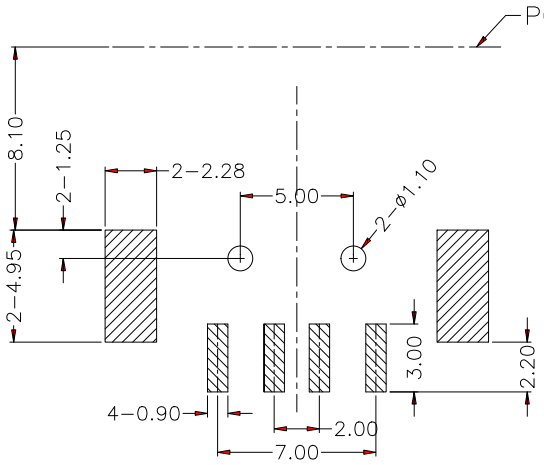

RECOMMEND PCB LAYOUT
PCB TOLERANCE:±0.05

Specification
*Electrical Characteristics:
Rating current:1.5A
Withstanding Voltage:500vac/minute
Insulation Resistance:1000 MΩ Min
Contact Resistance: 30 mΩ Max
*Environmental:
Operating Temperature: −20°C~+50°C.
*Environmental:
Durability: 1500 cycles min
*Material:
Insulator:HI−Temp Plastic UL 94V−0 Rated.
Contact:Copper Alloy(t=0.15mm).
Shell:SPCC(t=0.30mm).

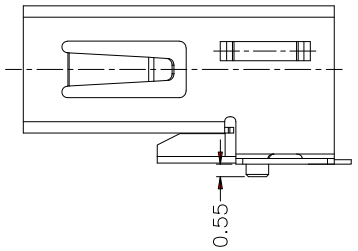

04XN-4XV33-X

1:Au 1U"
6:Au 30U"

B:Black O: Orange
G: Green W: White BL:Blue

S:Scrolls F:Flat

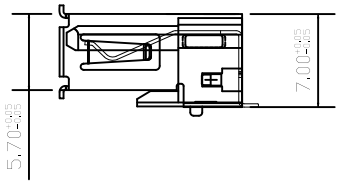

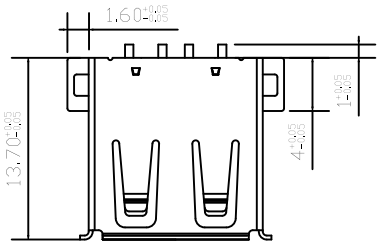

———		new		2015/5/3	A	瀚源	
ECN BO.		DESCRIPTION.		DATE.	REV.		
DESIGNED	CHECKED	APPROVAL	DRAWING NUMBER		SCALT: 1/2	SCALE: 3:1	
Mikey	Tom	Jerry	PART NAME	04XN-4V33-X	UNLESS OTHERWISE SPECIFIED,TOLERANCE:	X. ±0.25 X.x ±0.20 X.xx ±0.15 ANGULAR ±3°	
			MODEL NAME	04XN-4V33-X			
			3RD ANGLE PROJ	HanElectricity Co.,LTD		FILE.NO.	