NQUNXIN
群芯微电子

中国芯 光电梦



栅极驱动光耦

Gate Drive Optocoupler

QX341L

宁波群芯微电子股份有限公司

NINGBO QUNXIN MICROELECTRONICS CO., LTD.

中国 浙江省宁波杭州湾新区玉海东路 68 号

68 Yuhaidong Road, Hangzhou Bay New District, Ningbo, Zhejiang, China

概述 Description

QX341L 是一种输出电流为 3.0A 的栅极驱动光电耦合器，具有一个砷化铝镓（AlGaAs）的发光二极管，通过红外光耦合到光敏集成电路。这种光电耦合器可驱动大多数的小功率 IGBTs 和MOSFETs。在电机控制逆变器以及高性能电力系统应用中，其非常适用于快速切换驱动功率 IGBTs 和MOSFETs。

The QX341L is a gate driven optocoupler with an output current of 3.0A, with an AlGaAs LED, which is coupled to a photosensitive integrated circuit through infrared light. This optocoupler can drive most low-power IGBTs and MOSFETs. In the motor control inverter and high-performance power system applications, it is very suitable for fast switching drive power IGBTs and MOSFETs

特性 Features

- 35kV/μs 最小共模抑制（V_{CM}= 1500V）
  35kV/μs minimum Common Mode Rejection (V_{CM}= 1500V)
- 宽工作电压范围：10V 至 30V
  Wide operating V_{CC} Range: 10V ~ 30V
- 工作温度范围：-40℃ to +105℃
  Operating temperature range: –40°C ~ +105°C
- 最大传播延迟时间为 200ns
  200ns maximum propagation delay
- 100ns 最大传播延迟差
  100ns maximum propagation delay difference
- 3.0A 最大峰值输出曲线
  3.0A maximum peak output current
- 2.5A 最小峰值输出电流
  2.5A minimum peak output current
- 符合加强绝缘标准
  Meet reinforced insulation standards

应用 Applications

- 开关电源
  Switching power supplies
- IGBT/MOSFET 栅极驱动器
  IGBT/MOSFET gate drive
- 交流和无刷直流电机驱动器
  AC and Brushless DC motor drives
- 可再生能源逆变器
  Renewable energy inverters
- 工业逆变器
  Industrial inverters

真值表 Truth table

	V_{CC}-V_{EE} “ Positive Going” (Turn-on)		V_{CC}-V_{EE} “Negative Going” (Turn-off)	
LED	V_{CC}-V_{EE}	V_O	V_{CC}-V_{EE}	V_O
OFF	0V to 30V	Low	30V to 0V	Low
ON	0V to 6.9V	Low	30V to 7.5V	High
ON	6.9V to 8.7V	Transition	7.5V to 5.9V	Transition
ON	8.7V to 30V	High	5.9V to 0V	Low

Copyright ©2023 Qunxin All Rights Reserved

封装和原理图 Package and Schematic Diagram

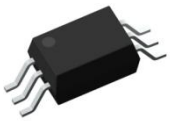

SOP6-W

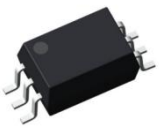

SOP6-P

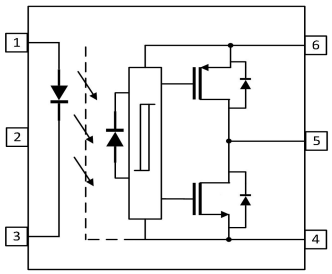

Pin Configuration
1. Anode
2. NC
3. Cathode
4. VSS
5. VO
6. VDD

注：在引脚 4 和 6 之间必须连接一个 0.1uF 的旁路电容器。

Note: A 0.1uF bypass capacitor must be connected between pins 4 and 6.

产品型号命名规则 Order Code

QX 341L - UN Y - W (V)

① ② ③ ④ ⑤ ⑥

① 公司代码 Company Code（QX: 群芯 Qunxin）
② 产品系列 Product Series（341L）
③ 框架类型 Lead Frame（Cu: 铜框架 Copper）
④ 树脂类型 Epoxy Type（H: 无卤 Halogen-free）
⑤ 封装形式 Package（P: PSOP; W: WSOP）
⑥ 产品版本 Product Versions: E

印字信息 Marking Information

- 印字中"◔"为群芯品牌 LOGO
  "◔"denotes LOGO
- 印字中"Y"代表年份：A(2018), B(2019), C(2020)……
  "Y"denotes YEAR：A(2018), B(2019), C(2020)……
- 印字中"WW"代表周号
  "WW"denotes Week's number
- 印字中的"E"代表经济型产品
  "E"denotes the economical product.
- 印字中的"H"代表无卤
  "H"denotes Halogen-free



Copyright ©2023 Qunxin All Rights Reserved

绝缘和安规信息 Insulation and Safety related specifications

项目 Item	符号 Symbol	数值 Value	单位 Unit	备注 Note
爬电距离 Creepage Distance	L	≥8	mm	从输入端到输出端，沿本体最短距离路径 Measured from input terminals to output terminals, shortest distance path along body.
电气间隙 Clearance Distance	L	≥8	mm	从输入端到输出端，通过空气的最短距离 Measured from input terminals to output terminals, shortest distance through air.
绝缘距离 Insulation Thickness	DTI	≥0.4	mm	发射器和探测器之间的绝缘厚度 Insulation thickness between emitter and detector.
峰值隔离电压 Peak Isolation Voltage	V_{IORM}	1500	V_{peak}	DIN/EN/IEC EN60747-5-5.
瞬态隔离电压 Transient Isolation Voltage	V_{IOTM}	7000	V_{peak}	DIN/EN/IEC EN60747-5-5.
隔离电压 Isolation Voltage	V_{ISO}	5000	V_{rms}	T_A = 25°C, RH < 50% for 1 min.

极限参数 Absolute Maximum Ratings (T_A=25℃)

参数 Parameter		符号 Symbol	额定值 Rating	单位 Unit
输入 Input	平均输入电流 Average Input Current	$I_{F(AVG)}$	25	mA
	峰值瞬态输入电流（<1 μs 脉冲宽度，300 pps） Peak Transient Input Current (<1 μs Pulse Width, 300 pps)	$I_{F(TRAN)}$	1.0	A
	反向电压 Reverse Voltage	V_R	5	V
	输入功率 Power Dissipation	P_I	45	mW
输出 Output	高峰值输出电流 High Peak Output Current	$I_{OH(PEAK)}$	-3	A
	低峰值输出电流 Low Peak Output Current	$I_{OL(PEAK)}$	3	A
	电源电压 Supply Voltage	V_{CC}-V_{EE}	0~35	V
	输出电压 Output Voltage	$V_{O(PECK)}$	-0.5~V_{CC}	V
	输出功率 Power Dissipation	P_O	700	mW
总功耗 Total Power Dissipation		P_{tot}	745	mW
隔离电压 Isolation Voltage		V_{ISO}	5000	V_{rms}
工作温度 Operating Temperature		T_{opr}	-40~+105	°C
储存温度 Storage Temperature		T_{STG}	-55~+125	°C
焊接温度 Soldering Temperature		T_{sol}	260	°C

Copyright ©2023 Qunxin All Rights Reserved

推荐操作条件 Recommended Operating Conditions

参数 Parameter	符号 Symbol	最小值 Min	最大值 Max.	单位 Unit
电源电压 Power Supply Voltage	V_{CC}-V_{EE}	10	30	V
开启电流 Input Current (ON)	$I_{F(ON)}$	7	16	mA
关断电压 Input Voltage (OFF)	$V_{F(OFF)}$	-3.6	0.8	V
工作温度 Operating Temperature	T_A	-40	+105	℃

产品特性参数 Electro-optical Characteristics (T_A=25℃)

除非另有说明，在推荐的工作条件下测试最小值和最大值。 所有典型值在 T_A=25℃、V_{DD}=30V、V_{SS}=GND 测得。
All minimum and maximum specifications are at recommended operating conditions, unless otherwise noted. All typical values are at T_A =25℃, V_{DD} =30V, V_{SS} =GND.

参数 Parameter		符号 Symbol	条件 Condition	最小 Min.	典型 Typ.	最大 Max.	单位 Unit
发射端 Input	正向电压 Forward Voltage	V_F	I_F=10mA	1.2	1.4	1.95	V
	反向电压 Reverse Voltage	B_{VR}	I_R=10uA	5	-	-	V
	阈值电流从低到高 Threshold Input Current Low to High	I_{FLH}	Rg = 10Ω, Cg = 25nF, V_O > 5V	-	1.85	4	mA
	阈值电压从高到低 Threshold Input Voltage High to Low	V_{FHL}	Rg = 10Ω, Cg = 25nF, V_O > 5V	0.8	-	-	V
	低电压锁定阈值 UVLO Threshold	V_{UVLO+}	I_F=10mA,V_O >5V	6.9	7.8	8.7	V
		V_{UVLO-}		5.9	6.7	7.5	
	低电压锁定阈值延迟 UVLO Hysteresis	$UVLO_{HYS}$	-	-	1.1	-	V
	输入正向电压的温度系数 Temperature Coefficient of Input Forward Voltage	$\Delta V_F/\Delta T_A$	I_F = 10mA	-	-1.7	-	mV/°C
	输入电容 Input Capacitance	C_{IN}	V=0, F=1kHz	-	70	-	pF
接收端 Output	高电平输出电流 High Level Output Current	I_{OH}	V_O=V_{CC}-4V	-	-2.3	-1.0	A
			V_{CC}-V_O≤15V	-	-5	-3	
	低电平输出电流 Low Level Output Current	I_{OL}	V_O = V_{EE}+2.5V	1.0	3.0	-	A
			V_O–V_{EE}≤15V	3	5	-	
	高输出晶体管电阻（开启） High Output Transistor Resistance	$R_{DS(OH)}$	I_{OH} = -2.5A	-	1.7	3.0	Ω

Copyright ©2023 Qunxin All Rights Reserved

	低输出晶体管电阻（开启） Low Output Transistor Resistance	$R_{DS(OL)}$	I_{OL} = 2.5A	-	0.8	1.8	
	高电平输出电压 High Level Output Voltage	V_{OH}	Io= -100mA,I_F=10mA	V_{CC}-0.3	V_{CC}-0.1	-	V
			I_F=10mA,Io= 0mA	-	V_{CC}	-	
	低电平输出电压 Low Level Output Voltage	V_{OL}	Io=100mA,VF=0V	-	0.1	0.2	
	高电平电源电流 High Level Supply Current	I_{CCH}	Rg = 10Ω Cg=25nF,I_F=10mA	-	1.8	3.0	mA
	低电平电源电流 Low Level Supply Current	I_{CCL}	Rg = 10Ω Cg=25nF,V_F=0V	-	2.1	3.0	
传输特性 Transfer Characteristics	低电平传输延迟 Propagation Delay Time to Low Output Level	T_{PHL}	V_{CC}=10V to 30V I_F=7mA to 16mA, Rg=10Ω Cg=25nF f=20kHz Duty Cycle=50%	50	97	200	ns
	高电平传输延迟 Propagation Delay Time to High Output Level	T_{PLH}		50	124	200	ns
	脉冲失真 Pulse Width Distortion	PWD		-	20	70	ns
	传播延迟差 Propagation Delay Difference Between Any Two Parts	PDD		-100	-	100	ns
	上升时间（10%~90%） Rise Time(10%~90%)	T_R		-	12	-	ns
	下降时间（90%~10%） Fall Time(90%~10%)	T_F		-	25	-	ns
	输出高电平共模抑制 Output High Level Common Mode Transient Immunity	$\|CM_H\|$	T_A =25℃, V_{CM}=1500V	35	50	-	kV/μs
	输出低电平共模抑制 Output Low Level Common Mode Transient Immunity	$\|CM_L\|$		35	50	-	kV/μs
	隔离电阻 Isolation Resistance	R_{ISO}	V_{I-O}≤500V	10^{12}	-	-	Ω
	隔离电容 Isolation Capacitance	C_{ISO}	V_{I-O} =0V，f=1MHz	-	1	-	pF

Copyright ©2023 Qunxin All Rights Reserved

典型光电特性曲线 Typical Electro-Optical Characteristics Curves

Fig.1 High Output Rail Voltage vs. Ambient Temperature

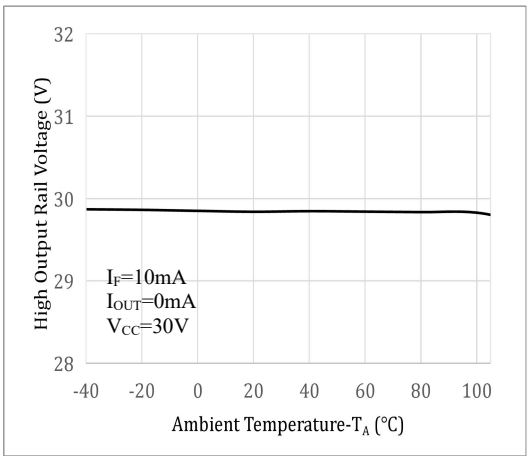

Fig.2 High Level Output Voltage vs. Ambient Temperature

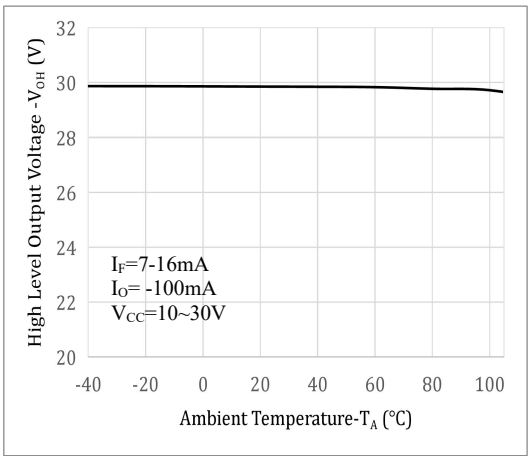

Fig.3 Low Level Output Voltage vs. Ambient Temperature

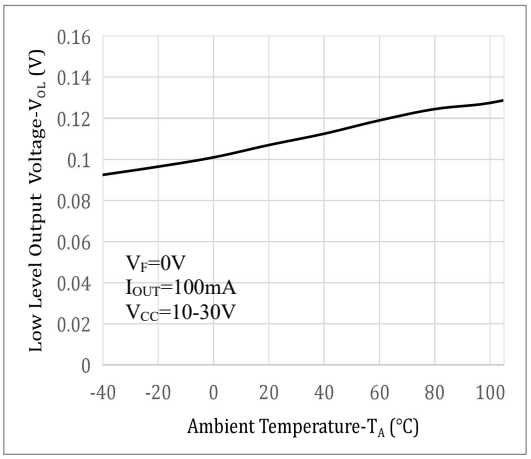

Fig.4 Supply Current vs. Ambient Temperature

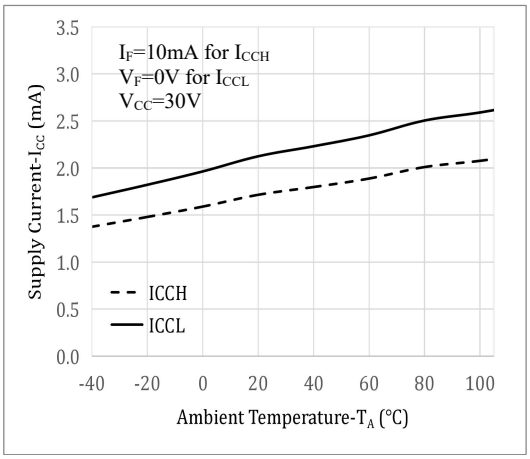

Fig.5 Supply Current vs. Supply Voltage

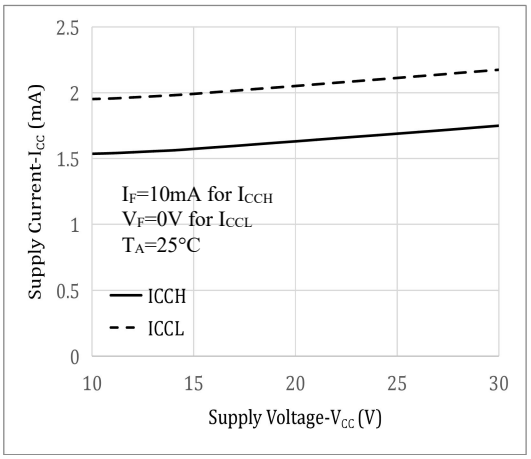

Fig.6 Output Voltage vs. Threshold Input Current Low to High

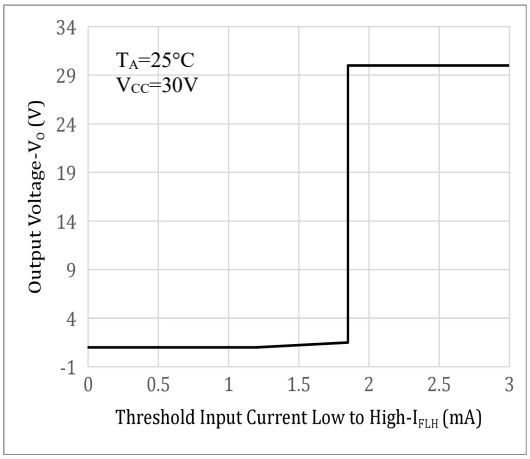

Copyright ©2023 Qunxin All Rights Reserved

Fig.7 Threshold Input Current Low to High vs. Ambient Temperature

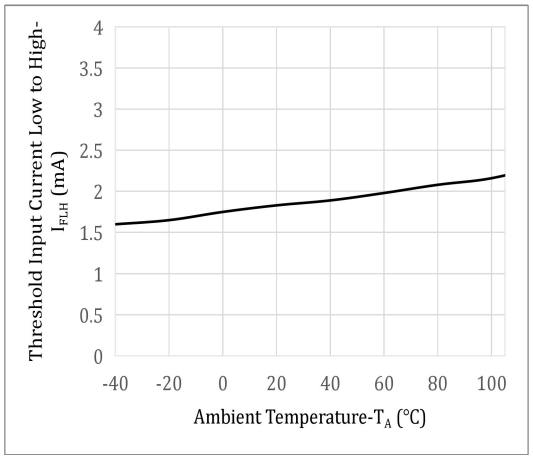

Fig.8 Propagation Delay vs. Supply Voltage

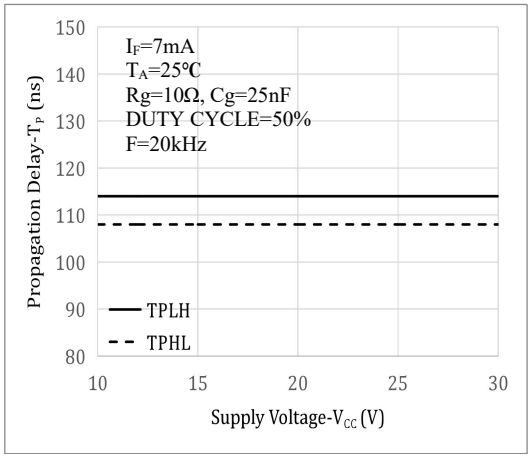

Fig.9 Propagation Delay vs. Input Forward Current

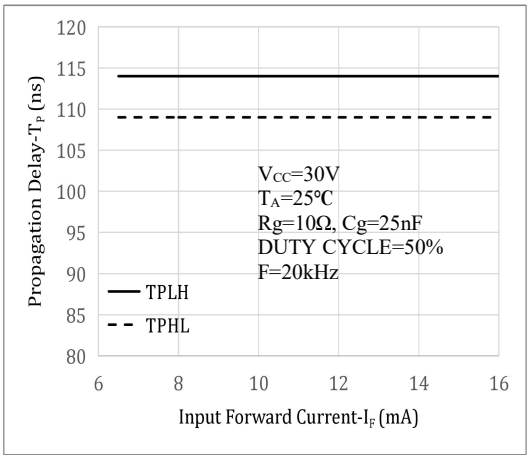

Fig.10 Propagation Delay vs. Ambient Temperature

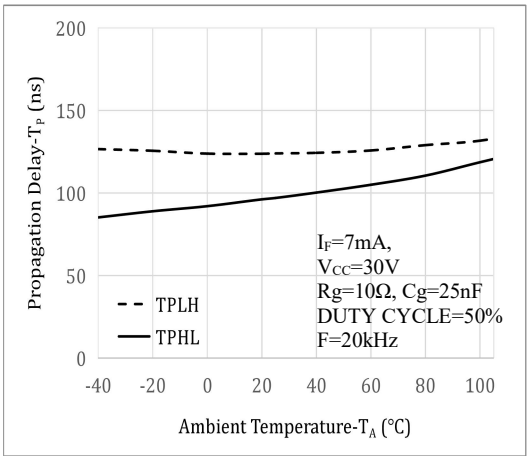

Fig.11 Propagation Delay vs. Load Resistance

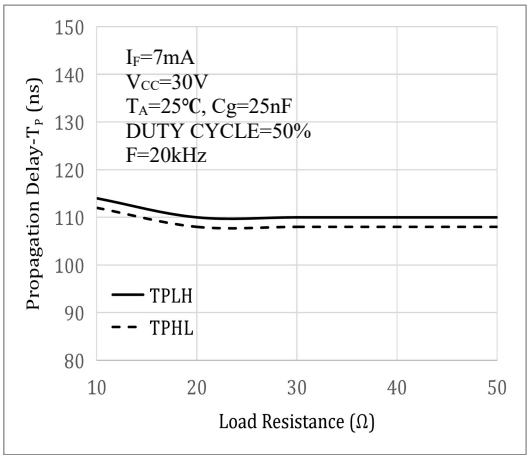

Fig.12 Propagation Delay vs. Load Capacitance

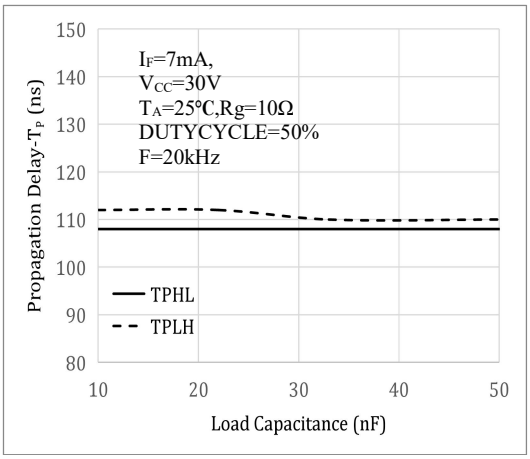

Copyright ©2023 Qunxin All Rights Reserved

Fig.13 Input Forward Current vs. Input Forward Voltage

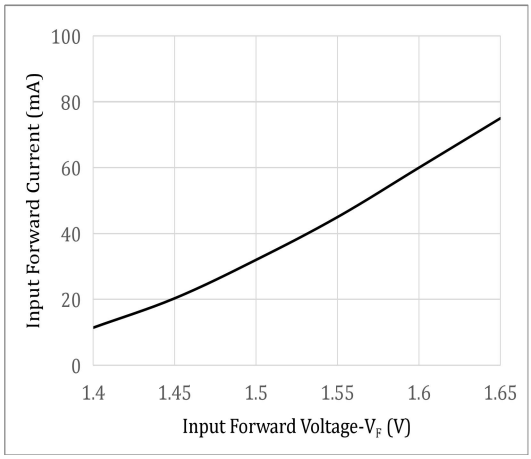

测试电路 Test Circuits

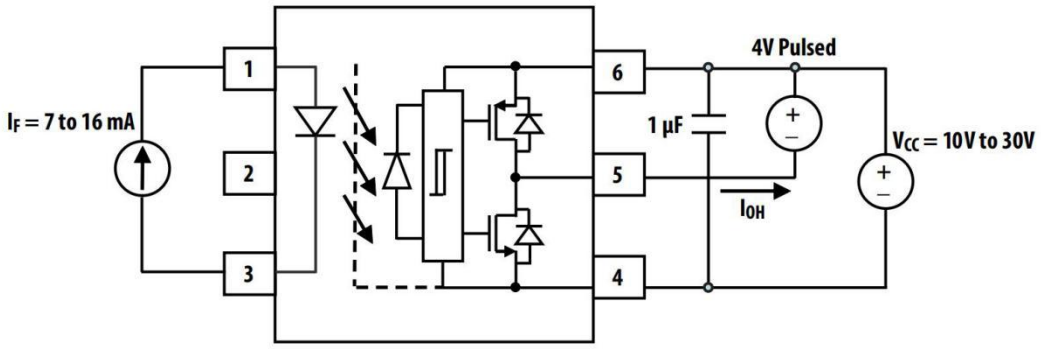

Figure.14 I_{OH} Pulsed Test Circuit

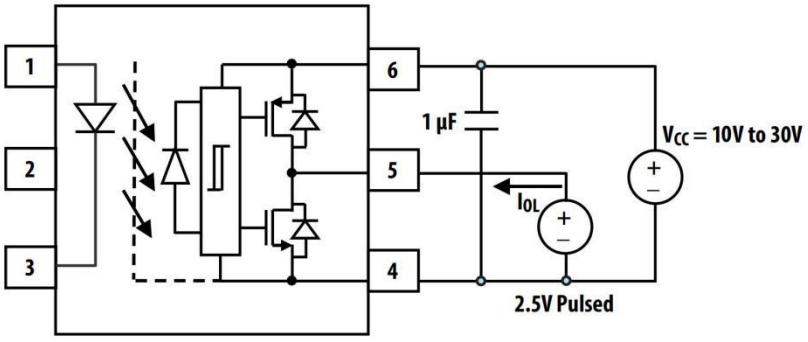

Figure.15 I_{OL} Pulsed Test Circuit

Copyright ©2023 Qunxin All Rights Reserved

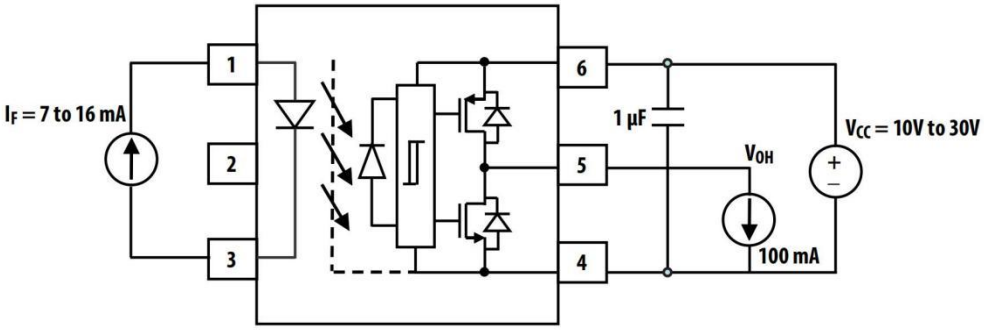

Figure.16 V_{OH} Pulsed Test Circuit

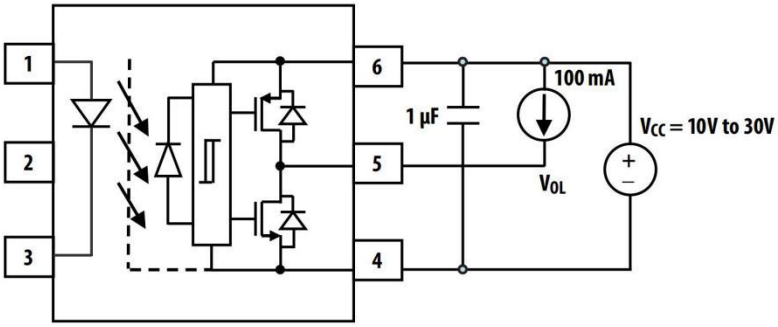

Figure.17 V_{OL} Pulsed Test Circuit

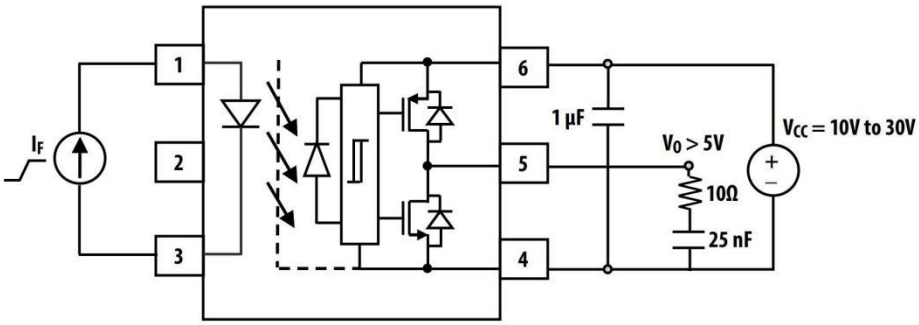

Figure.18 I_{FLH} Test Circuit

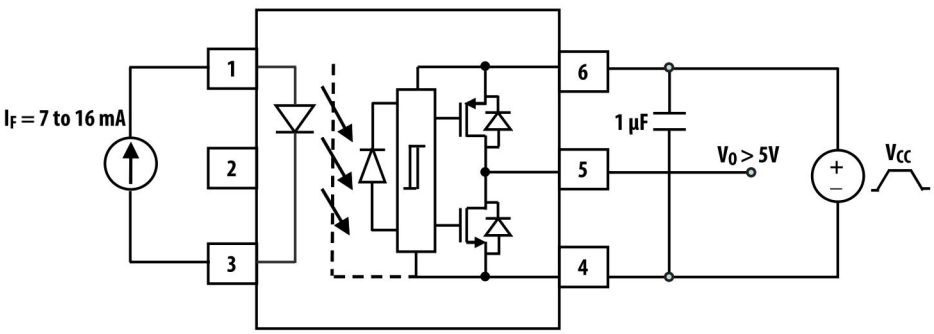

Figure.19 UVLO Test Circuit

Copyright ©2023 Qunxin All Rights Reserved

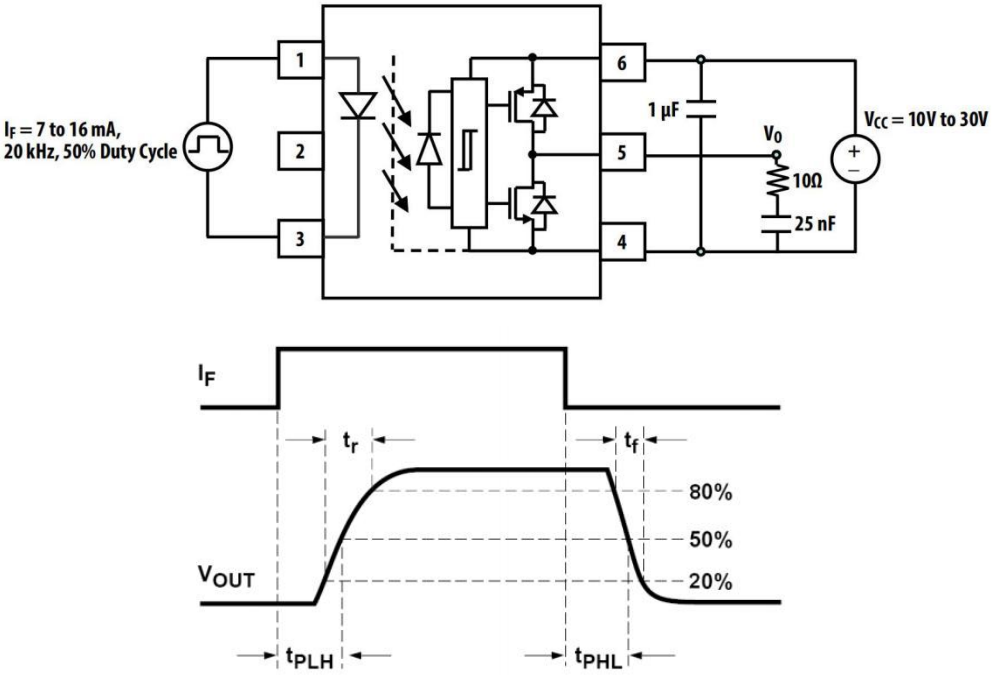

Figure.20 T_{PHL}、T_{PLH}、T_R、T_F Test Circuit

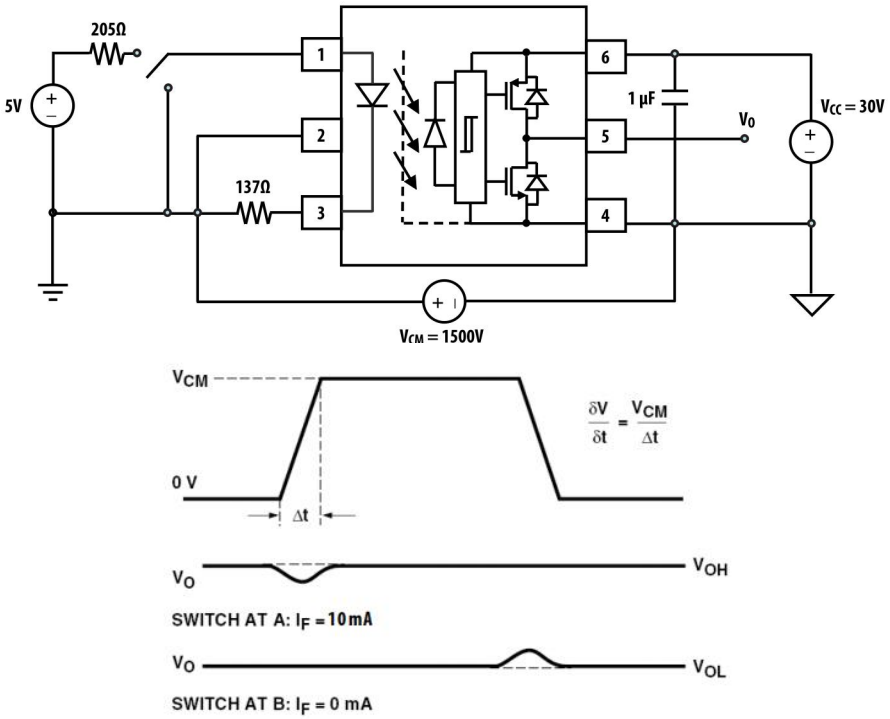

Figure.21 CMR Test Circuit

Copyright ©2023 Qunxin All Rights Reserved

外形尺寸 Outline Dimensions

SOP6-P

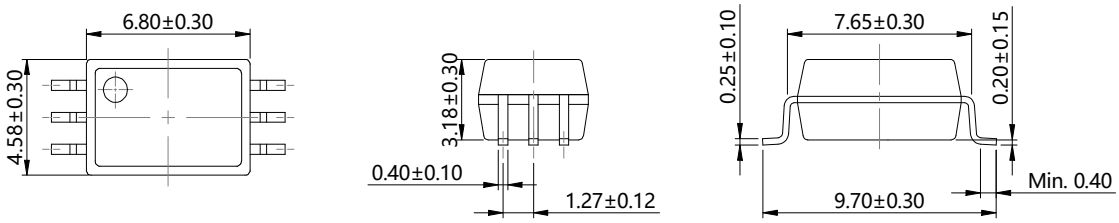

SOP6-W

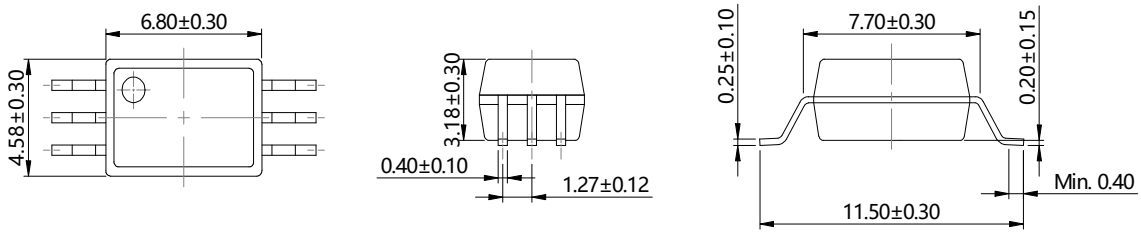

单位 Unit: mm

建议焊盘布局 Recommended Pad Layout

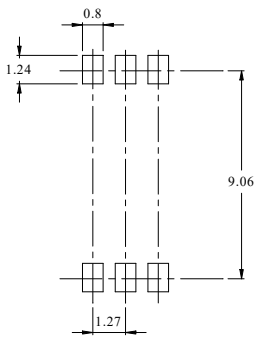

SOP6-P

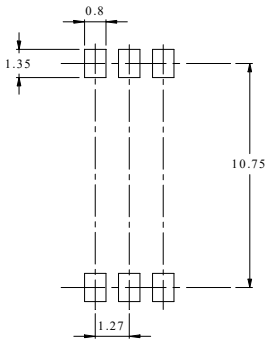

SOP6-W

单位 Unit: mm

注意：上图为产品正视图。
Note：The picture above is the front view of the product.

Copyright ©2023 Qunxin All Rights Reserved

回流焊温度曲线图 Solder Reflow Profile

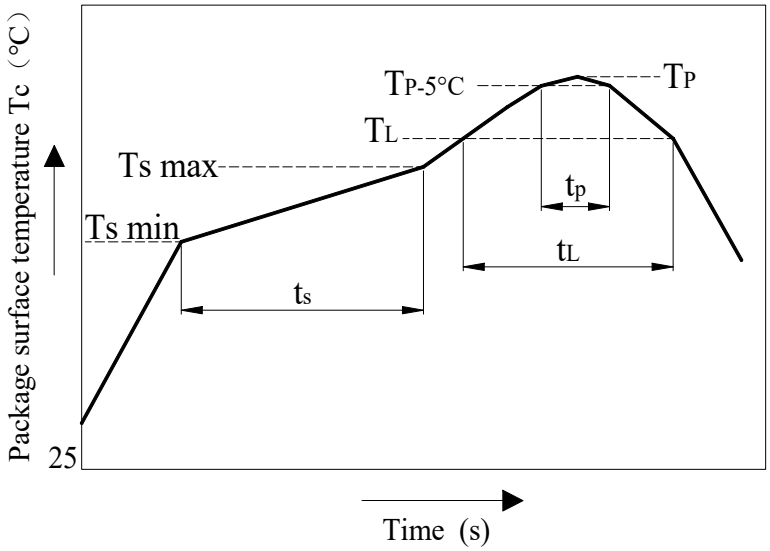

项目 Item	符号 Symbol	最小值 Min.	最大值 Max.	单位 Unit
预热温度 Preheat Temperature	T_s	150	200	℃
预热时间 Preheat Time	t_s	60	120	s
升温速率 Ramp-Up Rate (T_L to T_P)	-	-	3	℃/s
液相线温度 Liquidus Temperature	T_L	217		℃
时间高于 T_L Time Above T_L	t_L	60	150	s
峰值温度 Peak Temperature	T_P	-	260	℃
T_C 在(T_P-5)和 T_P 之间的时间 Time During Which T_C Is Between (T_P-5) and T_P	t_p	-	30	s
降温速率 Ramp-down Rate (T_P to T_L)	-	-	6	℃/s

注：建议在所示的温度和时间条件下进行回流焊，最多不能超过三次。

Note: Reflow soldering is recommended at the temperatures and times shown, no more than three times.

Copyright ©2023 Qunxin All Rights Reserved

波峰焊温度曲线图 Wave Soldering Profile

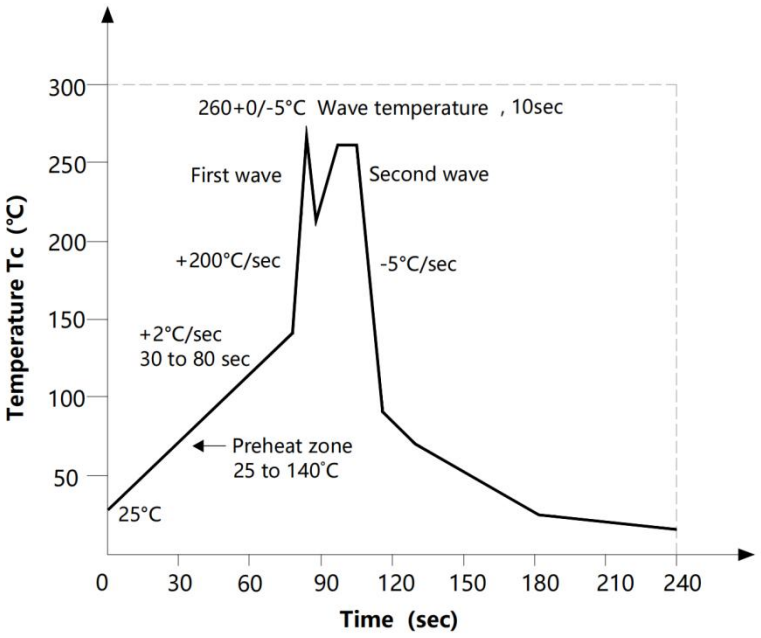

手工烙铁焊接 Soldering with hand soldering iron

A. 手工烙铁焊仅用于产品返修或样品测试；

Hand soldering iron is only used for product rework or sample testing;

B. 手工烙铁焊要求：温度 360℃ ± 5℃，时间≤3s。

Manual soldering method Temperature: 360℃ ± 5℃, within 3s.

Copyright ©2023 Qunxin All Rights Reserved

包装 Packing

■ 汇总表 Summary table

封装形式	包装方式	盘数量	盒数量	箱数量	静电袋规格	盒规格	箱(双瓦楞)规格	备注
SOP6	卷盘 (ϕ330mm 蓝盘)	1000 只/盘	2 盘/盒	10 盒/箱	450*390*0.1mm	353*340*60 mm	650*375*365mm	首端空 50 个空格，末端空 100 个空格
Package Type	Packing Form	Quantity per Reel	Quantity per Box	Quantity per Carton	Antistatic Bag Specification	Box Specification	Carton Specification	Note
SOP6	Reel (ϕ330mm Blue)	1000 pcs/reel	2 reels/box	10 boxes/ctn	450*390*0.1mm	353*340*60 mm	650*375*365mm	Leave 50 Spaces at the beginning and 100 Spaces at the end

■ 编带包装 Tape & Reel

1) 每卷数量：1000 只。
   Qty/reel：1000 pcs.
2) 每箱数量：20000 只。
   Qty/ctn：20000 pcs.
3) 内包装：每盒 2 盘。
   Inner packing：2 reels/box.
4) 示意图 Schematic：

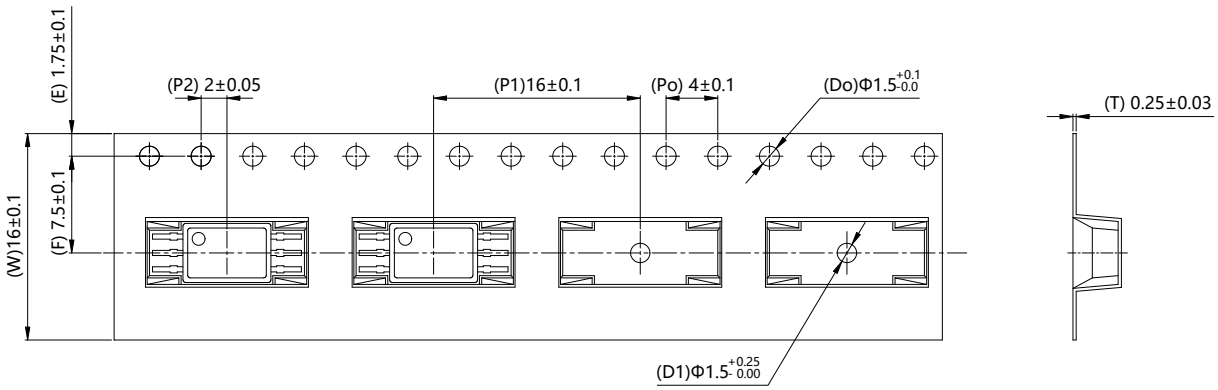

单位 Unit：mm

Copyright ©2023 Qunxin All Rights Reserved

注意 Attention

- 群芯持续不断改进质量、可靠性、功能或设计，保留此文件更改的权利恕不另行通知。
  QUNXIN continuously improve quality, reliability, function or design. We reserve the right to change this document without notice.
- 请遵守产品规格书使用，群芯不对使用时不符合产品规格书条件而导致的质量问题负责。
  Please use in accordance with the product specification. QUNXIN is not responsible for the quality problems caused by non-compliance with the product specifications.
- 对于需要高可靠性或安全性的设备/装置需求，请联系我们的销售人员。
  For equipment/devices where high reliability or safety is required, please contact our sales representatives.
- 当需要用于任何"特定"应用时，请咨询我们的销售人员。
  When requiring a device for any "specific" application, please contact our sales in advice.
- 如对文件中表述的内容有疑问，欢迎联系我们。
  If you have any questions about the contents of the document, please contact us.

Copyright ©2023 Qunxin All Rights Reserved