BORN SEMICONDUCTOR

SS8050

NPN Plastic-Encapsulate Transistor

Features

- V_{CE}=25V
- I_C=1.5A
- f_T=100MHZ @V_{CE}=10V, I_C=50mA,f=30MHz

Package

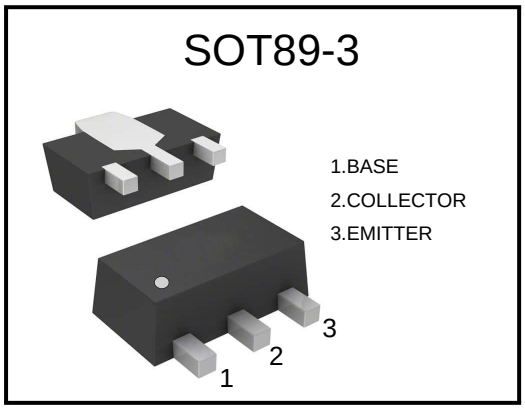

Description

- Complementary to SS8550
- High Collector Current
- SOT-89-3L Plastic Package.

Marking

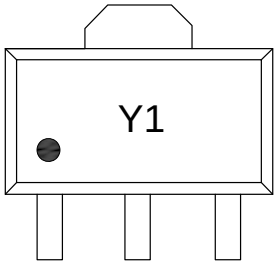

Ordering information

Order code	Package	Marking	Base qty	Delivery mode
SS8050	SOT-89-3L	Y1	1K	Tape and reel

Absolute Maximum Ratings @T_A=25°C unless otherwise noted

Symbol	Parameter	Value	Unit
V_{CBO}	Collector-Base Voltage	40	V
V_{CEO}	Collector-Emitter Voltage	25	V
V_{EBO}	Emitter-Base Voltage	5	V
I_C	Collector Current	1.5	A
P_C	Collector Power Dissipation	500	mW
$R_{\theta JA}$	Thermal Resistance From Junction To Ambient	250	°C/W
T_J	Junction Temperature	150	°C
T_{stg}	Storage Temperature	-55 to + 150	°C

BORN SEMICONDUCTOR , INC. ALL RIGHT RESERVED

Specifications are subject to change without notice.
Please refer to http://*www.born-tw.com* for current information.

Revision: 2022-Jan-1-A

SS8050

NPN Plastic-Encapsulate Transistor

Electrical Characteristics (T_A=+25°C, unless otherwise specified)

Symbol	Parameter	Test condition	Min.	Typ.	Max.	Unit
$V_{(BR)CBO}$	Collector-base breakdown voltage	I_C= 100μA, I_E=0	40	–	–	V
$V_{(BR)CEO}$	Collector-emitter breakdown voltage	I_C=0.1mA,I_B=0	25	–	–	
$V_{(BR)EBO}$	Emitter-base breakdown voltage	I_E=100μA,I_C=0	5	–	–	
I_{CBO}	Collector cut-off current	V_{CB}=40V,I_E=0	–	–	0.1	uA
I_{EBO}	Emitter cut-off current	V_{EB}=5V,I_C=0	–	–	0.1	
$h_{FE(1)}$	DC current gain	V_{CE}=1V,I_C=100mA	120	–	400	
$h_{FE(2)}$	DC current gain	V_{CE}=1V,I_C=800mA	40	–	–	
$V_{CE(sat)}$	Collector-emitter saturation voltage	I_C=800mA,I_B=80mA	–	–	0.5	V
$V_{BE(sat)}$	Base-emitter saturation voltage	I_C=800mA,I_B=80mA	–	–	1.2	
f_T	Transition frequency	V_{CE}=10V,I_C=50mA,f=30MHZ	100	–	–	MHZ
$h_{FE(1)}$Rank	L(120-200)	H(200-350)	J(300-400)			

BORN SEMICONDUCTOR , INC. ALL RIGHT RESERVED

Specifications are subject to change without notice.
Please refer to http://*www.born-tw.com* for current information.

SS8050

NPN Plastic-Encapsulate Transistor

Typical Performance Characteristics(T_J = 25 °C, unless otherwise noted)

Figure 1 : Static Characteristic

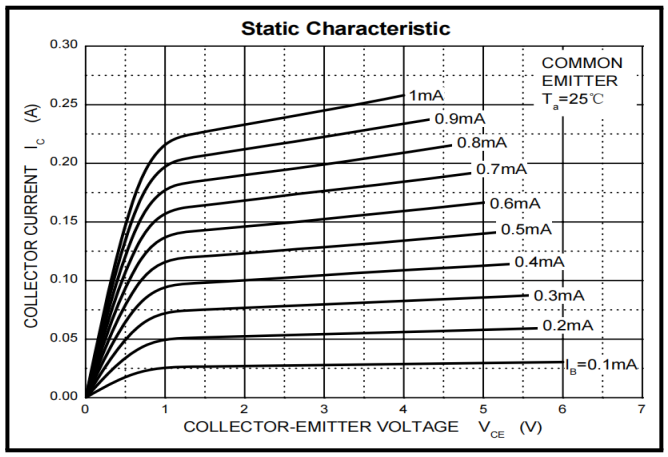

Figure 2 :h_{FE}——I_C

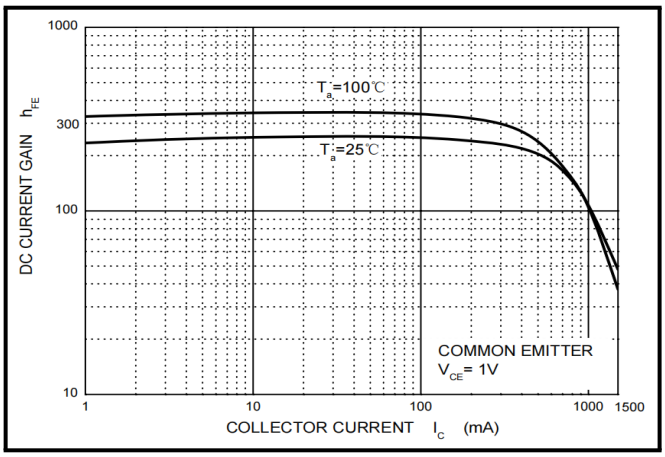

Figure 3 : $V_{CE(sat)}$—— I_C

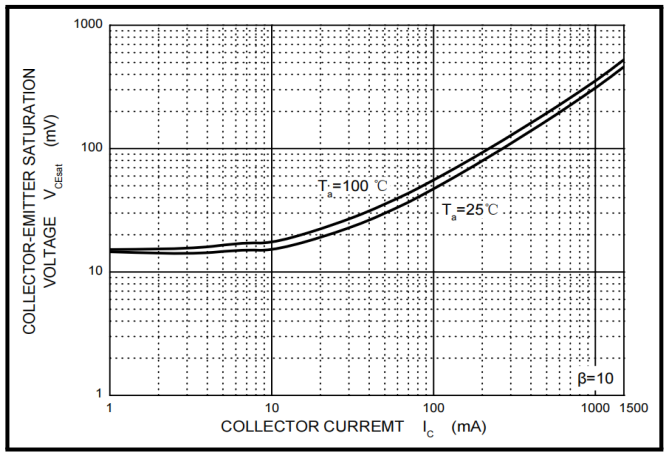

Figure 4 : V_{BE}——I_C

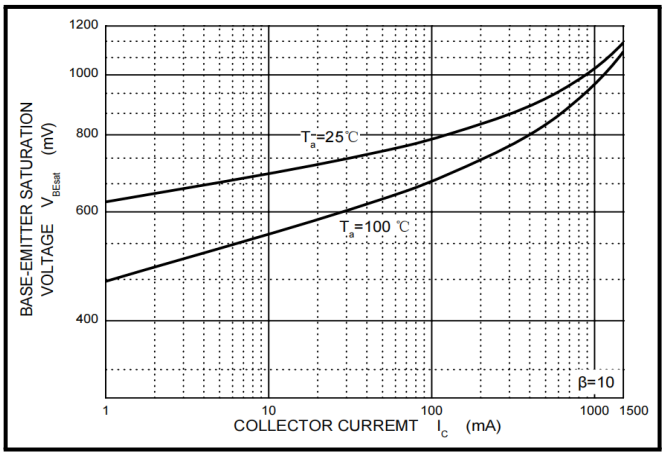

BORN SEMICONDUCTOR , INC. ALL RIGHT RESERVED

Specifications are subject to change without notice.
Please refer to http://*www.born-tw.com* for current information.

SS8050

NPN Plastic-Encapsulate Transistor

Typical Performance Characteristics(T_J = 25 °C, unless otherwise noted)

Figure 5 :I_C——V_{BE}

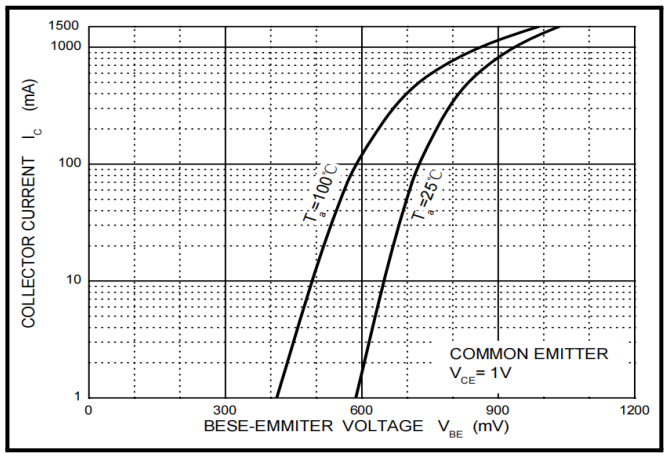

Figure 6 :C_{ob}/C_{ib}——V_{CB}/V_{EB}

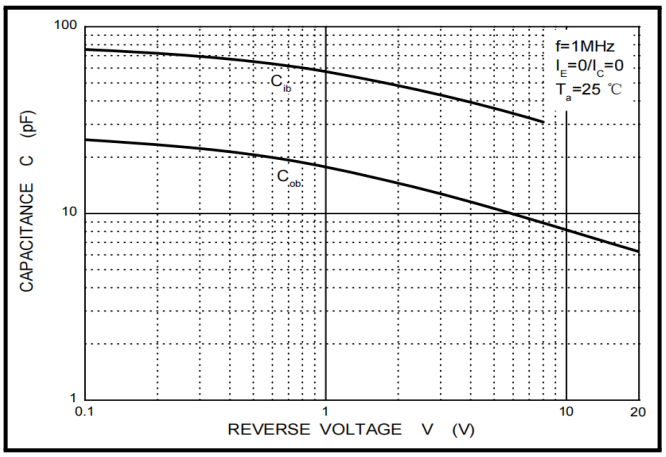

Figure 7 : f_T—— I_C

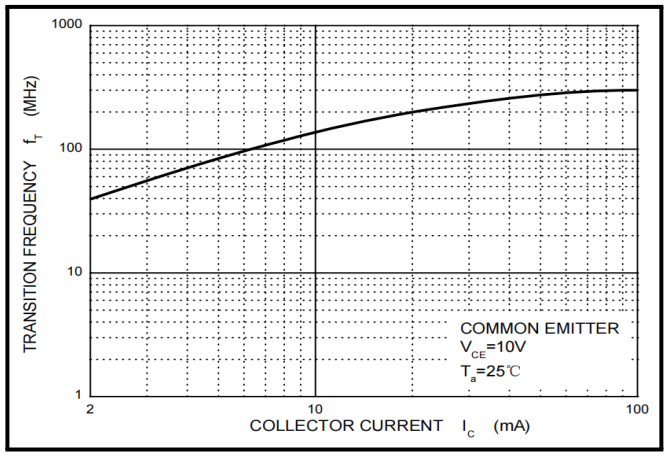

Figure 8 : P_c——T_a

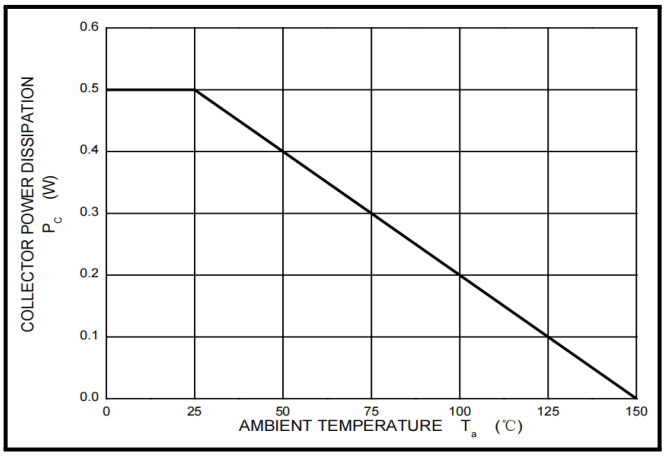

BORN SEMICONDUCTOR , INC. ALL RIGHT RESERVED

Specifications are subject to change without notice.
Please refer to http://*www.born-tw.com* for current information.

Revision: 2022-Jan-1-A

SS8050

NPN Plastic-Encapsulate Transistor

Outline Drawing - SOT89-3

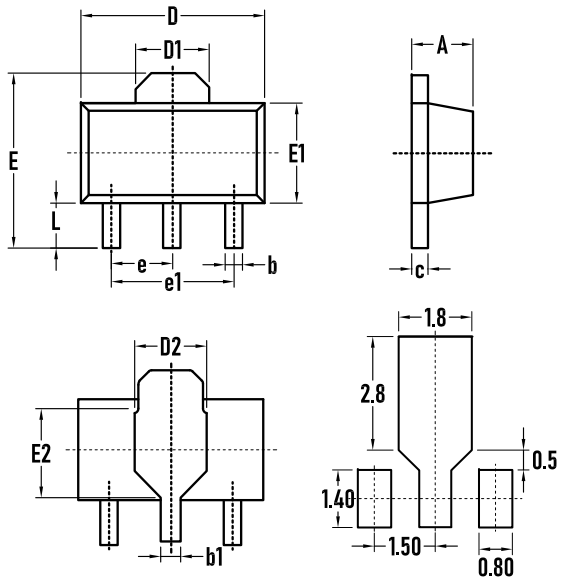

SYMBOL	MILLIMETER		Inches	
	MIN.	MAX	MIN.	MAX
A	1.400	1.600	0.055	0.063
b	0.320	0.520	0.013	0.020
b1	0.380	0.580	0.015	0.023
c	0.350	0.440	0.014	0.017
D	4.400	4.600	0.173	0.181
D1	1.550		0.061	
D2	1.710		0.069	
E	3.940	4.250	0.155	0.167
E1	2.300	2.600	0.091	0.102
E2	1.900		0.071	
e	1.500 (Typ.)		0.060 (Typ.)	
e1	3.000 (Typ.)		0.118 (Typ.)	
L	0.900	1.200	0.035	0.047

Packaging Tape - SOT89-3

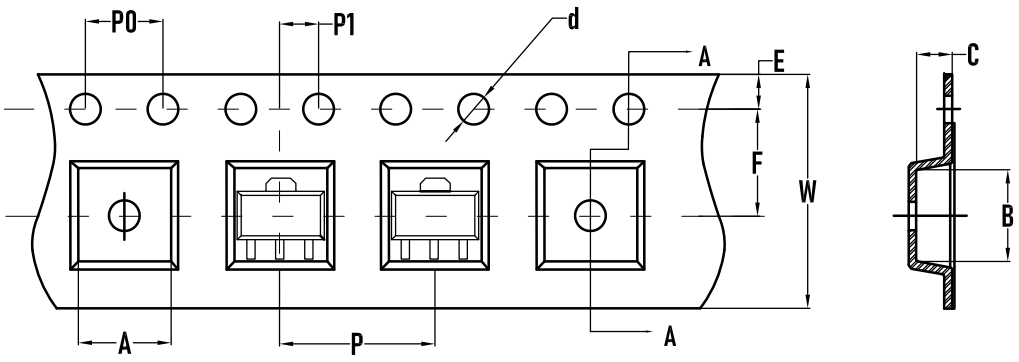

SYMBOL	MILLIMETER
A	4.85
B	4.45
C	1.85
d	1.50
E	1.75
F	5.50
P0	4.00
P	8.00
P1	2.00
W	12.00

Packaging Reel

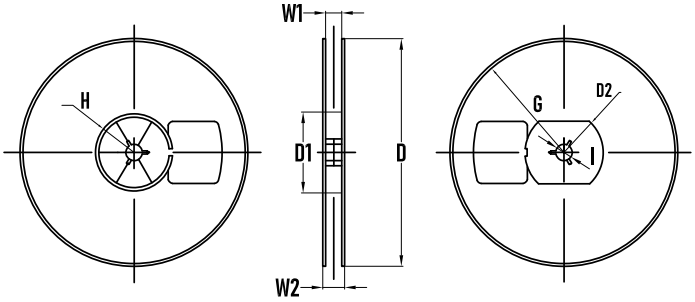

SYMBOL	MILLIMETER
D	180.00
D1	60.00
D2	R32.00
G	R86.50
H	R30.00
I	13.00
W1	13.20
W2	16.50

BORN SEMICONDUCTOR , INC. ALL RIGHT RESERVED

Specifications are subject to change without notice.
Please refer to http://*www.born-tw.com* for current information.

Revision: 2022-Jan-1-A