ROHS

REVISIONS					
REV.	ECN NO.	LOCATION	DESCRIPTION	DATE	DESIGN
A0	N/A		INITIAL RELEASE	2024.09.21	

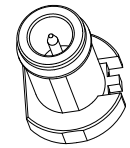

3D View

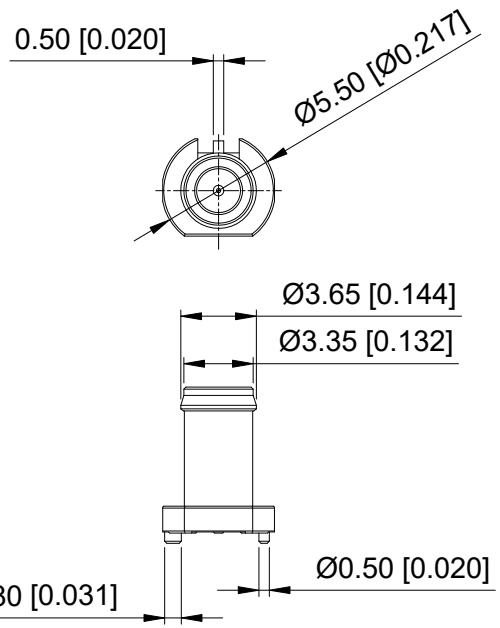

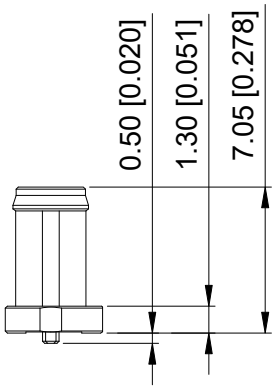

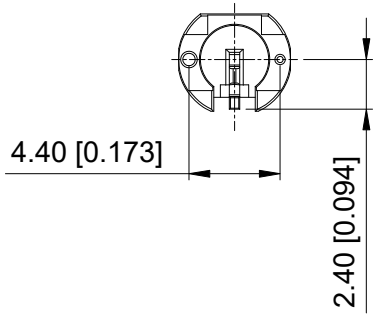

Specifications(规格)：
1.Impedance(特性阻抗)：50Ω；
2.Frequency（工作频率）：DC～3GHz;
3.Insulation resistance(绝缘阻抗)：≥100MΩ；
4.Dielectric withstand voltage（介质耐电压）：500V AC；
5.Mating cycles（耐久性）：≥25 cycles；
6.Temperature range(使用温度)：-40℃～+105℃;

PART NO.:

XS70WM1NR-N025

62: H=6.25mm
70: H=7.05mm

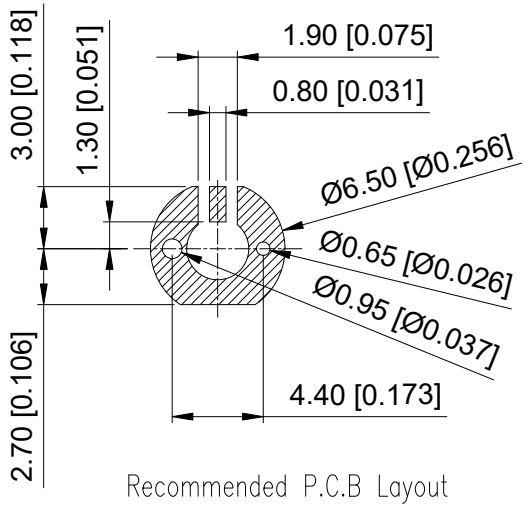

Recommended P.C.B Layout

ANGLAR	±5°
X.	±0.50
X.x	±0.30
X.xx	±0.20
X.xxx	±0.10

UNSPECIFIED TOLERANCES

NO.	SPEC.	MATERIAL	FINISH（Contact）	Q'TY	Note
3	Dielectric	LCP		1 PC	
2	Outer Conductor	Zinc Alloy	Tin PLATED	1 PC	
1	Center Conductor	Copper Alloy	Gold PLATED	1 PC	

www.helloxkb.com www.helloxkb.cn www.xk-dg.cn

XKB 星坤 Connection

XKB INDUSTRIAL PRECISION CO.,LIMITED

DESIGN	希 文	VIEW:	MODEL TYPE: SMB Male Connector, SMT, H=7.05mm
CHECKED		UNIT: mm/in	PART NO.: XS70WM1NR-N025
APPROVED		SIZE: A4	DWG NO.: X-XS70WM1NR-N025

SCALE	PAGE	REVISION
N/A	1/1	A0