SL3007

P-Channel Enhancement Mode MOSFET

Description

The SSL3007 uses advanced trench technology to provide excellent $R_{DS(ON)}$, low gate charge and operation with gate voltages as low as 2.5V. This device is suitable for use as a Battery protection or in other Switching application.

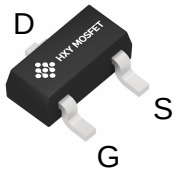

SOT-23-3L

General Features

V_{DS} = -30V,I_D = -9.5A

$R_{DS(ON)}$ < 20mΩ @ V_{GS}=-10V

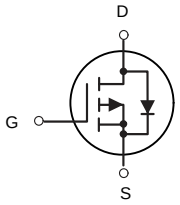

P-Channel MOSFET

Application

High power and current handing capability
Lead free product is acquired
Surface mount package
PWM applications
Load switch
Power management

Ordering Information

Product ID	Pack	Brand	Qty(PCS)
SL3007	SOT-23-3L	HXY MOSFET	3000PCS

Absolute Maximum Ratings (T_A=25°C unless otherwise noted)

Symbol	Parameter		Max.	Units
V_{DSS}	Drain-Source Voltage		-30	V
V_{GSS}	Gate-Source Voltage		±20	V
I_D	Continuous Drain Current	T_A= 25°C	-9.5	A
		T_A= 100°C	-5.5	A
I_{DM}	Pulsed Drain Current note1		-46	A
E_{AS}	Single Pulsed Avalanche Energy note2		35	mJ
P_D	Power Dissipation	T_A= 25°C	3.0	W
$R_{\theta JA}$	Thermal Resistance, Junction to Ambient		48	℃/W
T_J, T_{STG}	Operating and Storage Temperature Range		-55 to +150	℃

Electrical Characteristics (T_J=25°C unless otherwise specified)

Symbol	Parameter	Test Condition	Min.	Typ.	Max.	Units
Off Characteristic						
$V_{(BR)DSS}$	Drain-Source Breakdown Voltage	V_{GS}=0V, I_D= -250μA	-30	-	-	V
I_{DSS}	Zero Gate Voltage Drain Current	V_{DS}= -30V, V_{GS}=0V,	-	-	-1	μA
I_{GSS}	Gate to Body Leakage Current	V_{DS}=0V, V_{GS}= ±20V	-	-	±100	nA
On Characteristics						
$V_{GS(th)}$	Gate Threshold Voltage	V_{DS}=V_{GS}, I_D= -250μA	-1.0	-1.6	-2.5	V
$R_{DS(on)}$	Static Drain-Source on-Resistance Note3	V_{GS}= -10V, I_D= - 5A	-	14	20	mΩ
		V_{GS}= -4.5V, I_D= -5A	-	19	27	
Dynamic Characteristics						
C_{iss}	Input Capacitance	V_{DS}= -15V, V_{GS}=0V, f=1.0MHz	-	1330	-	pF
C_{oss}	Output Capacitance		-	183	-	pF
C_{rss}	Reverse Transfer Capacitance		-	156	-	pF
Q_g	Total Gate Charge	V_{DS}= -15V, I_D= -5A, V_{GS}= -10V	-	22	-	nC
Q_{gs}	Gate-Source Charge		-	1.0	-	nC
Q_{gd}	Gate-Drain(“Miller”) Charge		-	1.8	-	nC
Switching Characteristics						
$t_{d(on)}$	Turn-on Delay Time	V_{DD}= -15V, I_D= -10A, V_{GS}=-10V, R_{GEN}=2.5Ω	-	9	-	ns
t_r	Turn-on Rise Time		-	13	-	ns
$t_{d(off)}$	Turn-off Delay Time		-	48	-	ns
t_f	Turn-off Fall Time		-	20	-	ns
Drain-Source Diode Characteristics and Maximum Ratings						
I_S	Maximum Continuous Drain to Source Diode Forward Current		-	-	-9.5	A
I_{SM}	Maximum Pulsed Drain to Source Diode Forward Current		-	-	-46	A
V_{SD}	Drain to Source Diode Forward Voltage	V_{GS}=0V, I_S= -15A	-	-0.8	-1.2	V
trr	Reverse Recovery Time	T_J=25°C, V_{DD}= -24V,I_F=-2.8A, dI/dt=-100A/μs	-	64	-	ns
Qrr	Reverse Recovery Charge		-	25	-	nC

Notes:1. Repetitive Rating: Pulse Width Limited by Maximum Junction Temperature

2. EAS condition: T_J=25℃, V_{GS}=10V, R_G=25Ω, L=0.5mH, I_{AS}=-12.7A

3. Pulse Test: Pulse Width≤300μs, Duty Cycle≤0.5%

Typical Performance Characteristics

Figure1: Output Characteristics

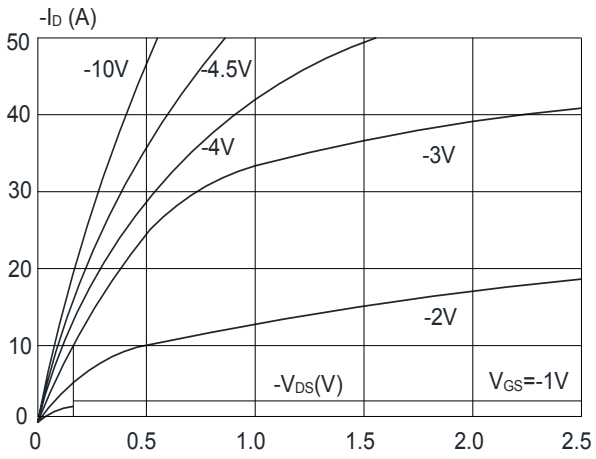

Figure 2: Typical Transfer Characteristics

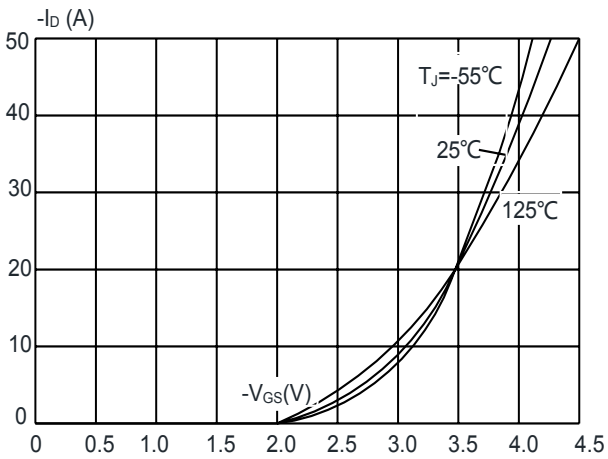

Figure 3: On-resistance vs. Drain Current

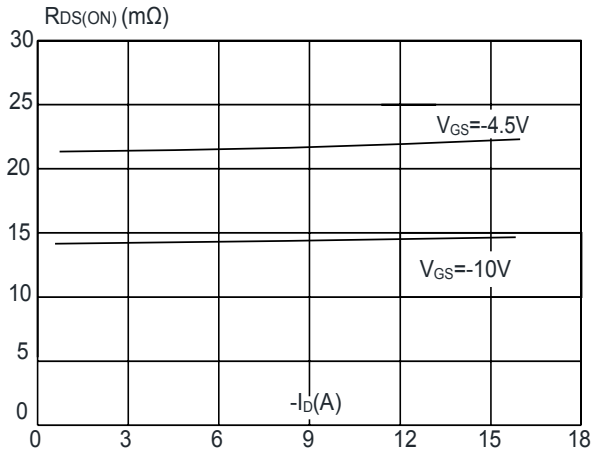

Figure 4: Body Diode Characteristics

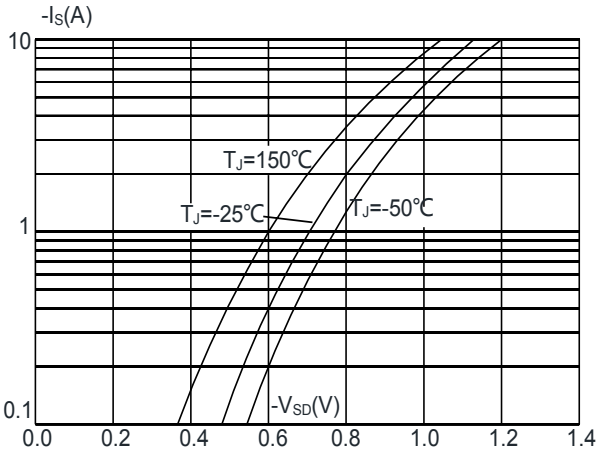

Figure 5: Gate Charge Characteristics

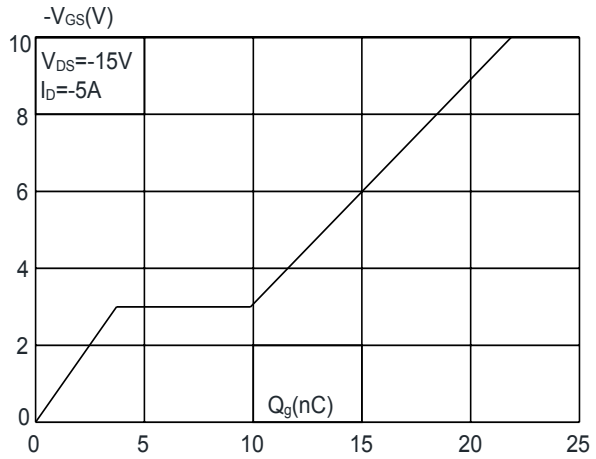

Figure 6: Capacitance Characteristics

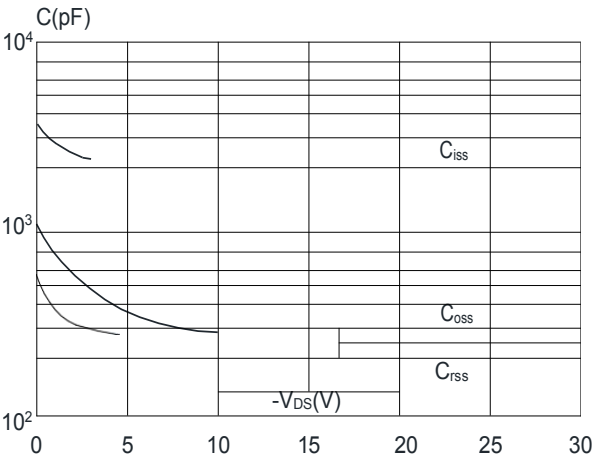

Figure 7: Normalized Breakdown Voltage vs. Junction Temperature

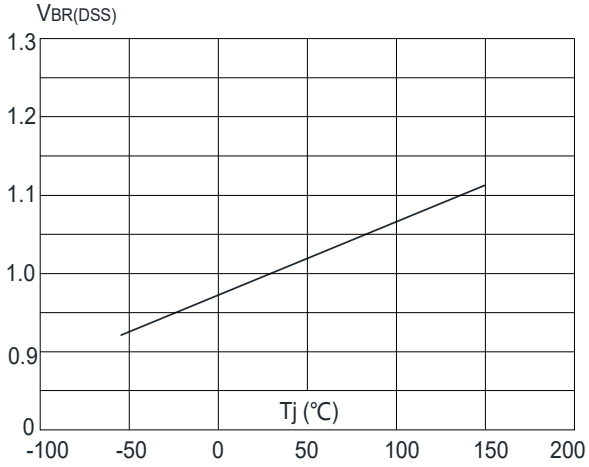

Figure 8: Normalized on Resistance vs. Junction Temperature

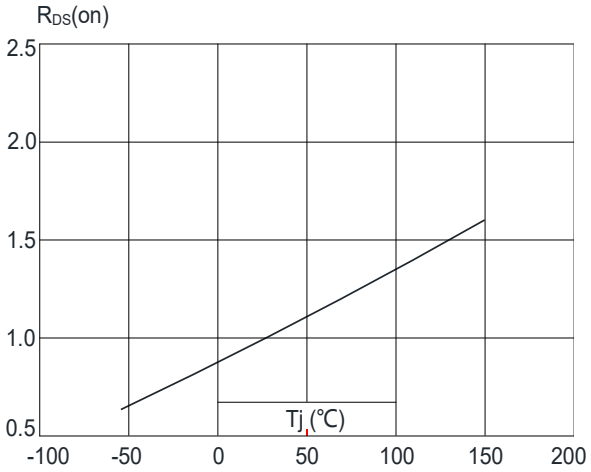

Figure 9: Maximum Safe Operating Area

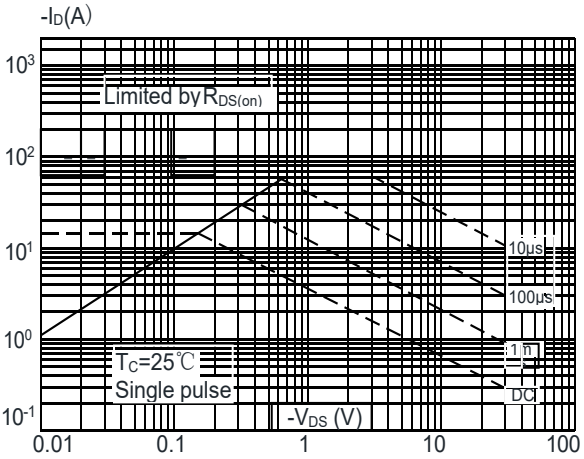

Figure 10: Maximum Continuous Drain Current vs. Ambient Temperature

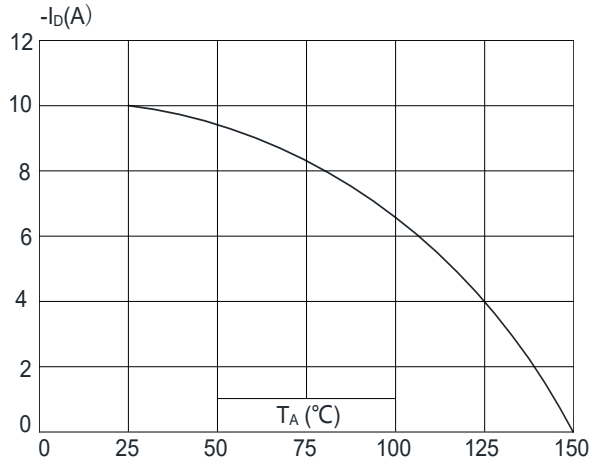

Figure.11: Maximum Effective Transient Thermal Impedance, Junction-to-Case

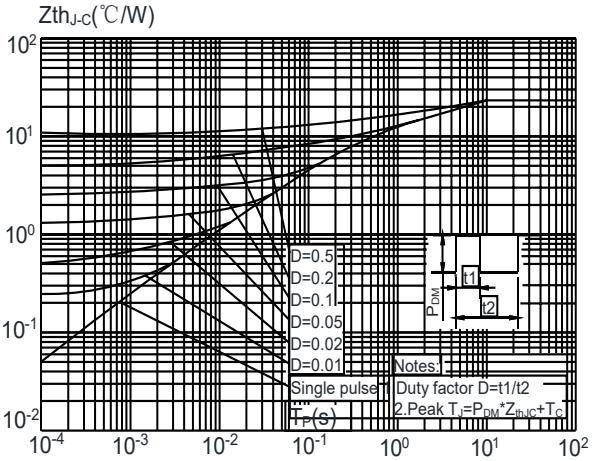

Test Circuit

Gate Charge Test Circuit & Waveform

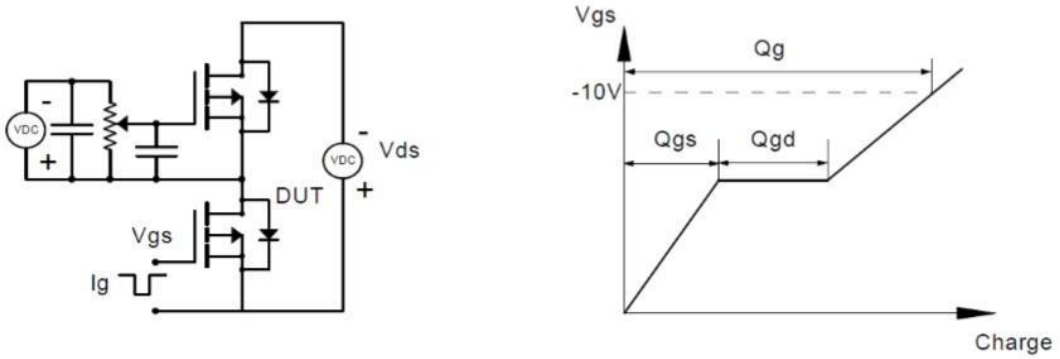

Resistive Switching Test Circuit & Waveforms

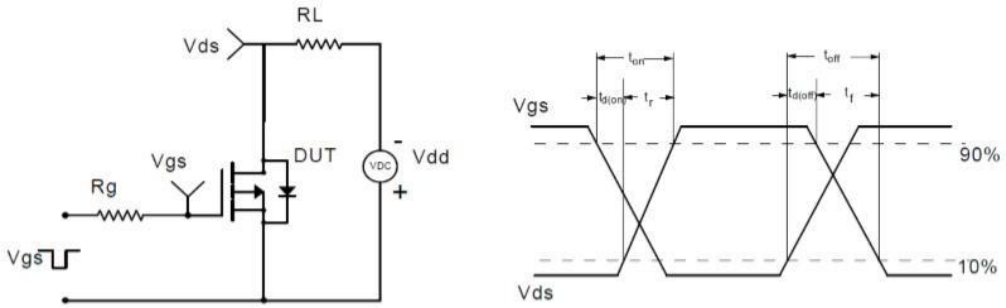

Unclamped Inductive Switching (UIS) Test Circuit & Waveforms

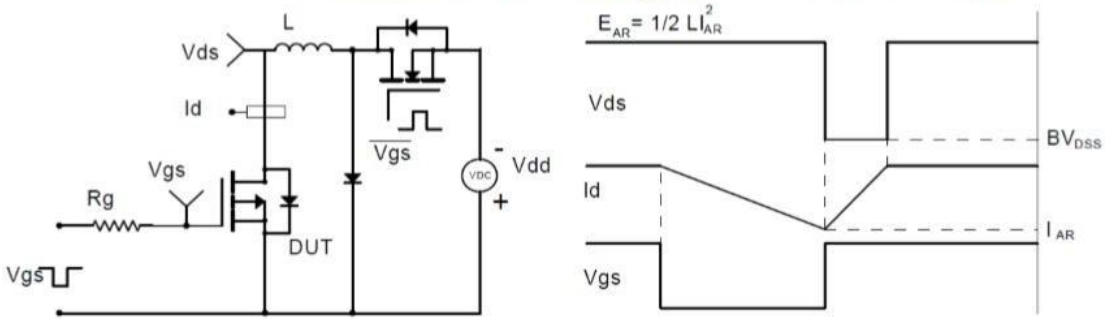

Diode Recovery Test Circuit & Waveforms

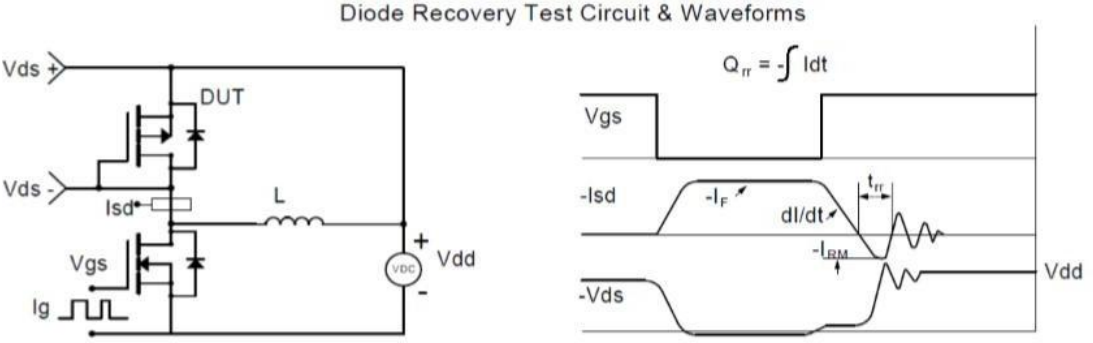

SOT-23-3L Package Information

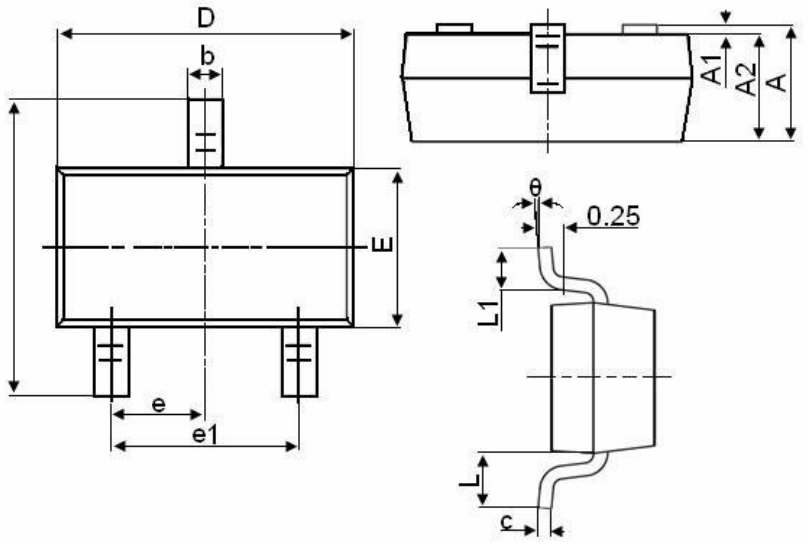

Symbol	Dimensions in Millimeters	
	MIN.	MAX.
A	1.050	1.250
A1	0.000	0.100
A2	1.050	1.150
b	0.300	0.500
c	0.100	0.200
D	2.800	3.000
E	1.500	1.700
E1	2.650	2.950
e	0.950TYP	
e1	1.800	2.000
L	0.550REF	
L1	0.300	0.600
θ	0°	8°

Attention

■ Any and all HUA XUAN YANG ELECTRONICS products described or contained herein do not have specifications that can handle applications that require extremely high levels of reliability, such as life-support systems, aircraft's control systems, or other applications whose failure can be reasonably expected to result in serious physical and/or material damage. Consult with your HUA XUAN YANG ELECTRONICS representative nearest you before using any HUA XUAN YANG ELECTRONICS products described or contained herein in such applications.

■ HUA XUAN YANG ELECTRONICS assumes no responsibility for equipment failures that result from using products at values that exceed, even momentarily, rated values (such as maximum ratings, operating condition ranges, or other parameters) listed in products specifications of any and all HUA XUAN YANG ELECTRONICS products described or contained herein.

■ Specifications of any and all HUA XUAN YANG ELECTRONICS products described or contained herein stipulate the performance, characteristics, and functions of the described products in the independent state, and are not guarantees of the performance, characteristics, and functions of the described products as mounted in the customer's products or equipment. To verify symptoms and states that cannot be evaluated in an independent device, the customer should always evaluate and test devices mounted in the customer's products or equipment.

■ HUA XUAN YANG ELECTRONICS CO.,LTD. strives to supply high-quality high-reliability products. However, any and all semiconductor products fail with some probability. It is possible that these probabilistic failures could
give rise to accidents or events that could endanger human lives, that could give rise to smoke or fire, or that could cause damage to other property. When designing equipment, adopt safety measures so that these kinds of accidents or events cannot occur. Such measures include but are not limited to protective circuits and error prevention circuits for safe design, redundant design, and structural design.

■ In the event that any or all HUA XUAN YANG ELECTRONICS products(including technical data, services) described or contained herein are controlled under any of applicable local export control laws and regulations, such products must not be exported without obtaining the export license from the authorities concerned in accordance with the above law.

■ No part of this publication may be reproduced or transmitted in any form or by any means, electronic or mechanical, including photocopying and recording, or any information storage or retrieval system, or otherwise, without the prior written permission of HUA XUAN YANG ELECTRONICS CO.,LTD.

■ Information (including circuit diagrams and circuit parameters) herein is for example only ; it is not guaranteed for volume production. HUA XUAN YANG ELECTRONICS believes information herein is accurate and reliable, but no guarantees are made or implied regarding its use or any infringements of intellectual property rights or other rights of third parties.

■ Any and all information described or contained herein are subject to change without notice due to product/technology improvement, etc. When designing equipment, refer to the "Delivery Specification" for the HUA XUAN YANG ELECTRONICS product that you intend to use.