承 認 書

SPECIFICATION FOR APPROVAL

CUSTOMER:	STD
DESCRIPTION:	WIRE WOUND CHIP INDUCTOR
PART NO:	MWI1812PS系列
CUST. PART NO:	
REV. NO.	A0

DRAWING		
PREPARED	CHECKED	APPROVED
Yu	Lu	Zeng
DATE:	2023/10/10	

CUSTOMER APPROVE

® 铭易轩电子科技有限公司

Ming Yixuan Electronic Technology Co., LTD

1.dress: VV Building, No. 20 Jingtai Road, Dalang Town, Dongguan City, Guangdong Province, P.R.China TEL:13640935893

2.dress: Times Center Building, Shajing Subdistrict, Bao'an District, Shenzhen (Shenzhen Branch) TEL:13510086325

Specifications subjectto change withoutnotice.Please confirm according to our companyfor latestinformation

网址: http://www.dgmingyixuan.com

铭易轩电子 SPECIFICATION FOR APPROVAL

CUSTOMER:		REV. NO.	A0
PART NO:	MWI1812PS系列	PAGE NO:	1/5
CUST. PART NO:		DATE:	2023/10/10

MODIFY RECORD 变更履历

Date	Rev. No.	Change Content	Prepared	Approved
2023/10/10	A0	New issue	Yu	Zeng

CUSTOMER:		REV. NO.	A0
PART NO:	MWI1812PS系列	PAGE NO:	2/5
CUST. PART NO:		DATE:	2023/10/10

1. SHAPE & DIMENSION (UNIT:mm)

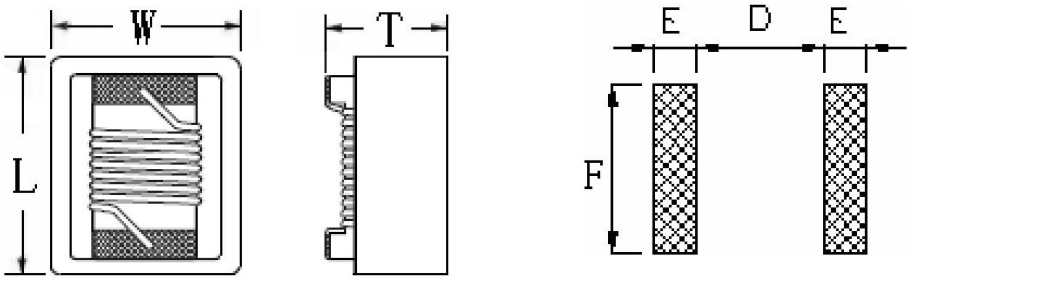

Recommended patterns

L	W	T	E	F	D
5.87 Max.	4.98 Max.	4.20 Max.	1.14 Typ.	3.05 Typ.	3.00 Typ.

2. SCHEMATIC

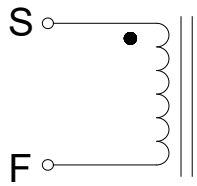

3. PART NUMBERING SYSTEM

MWI	xxx	PS	xxx	M	S	T	-	HF
1	2	3	4	5	6	7		8

1 PRODUCT SYMBOL（产品代号）

2 DIMENSIONS （规格尺寸）

3 MATERIAL （芯片类型）

4 INDUCTANCE（电感量）

5 TOLERANCE（公差） M±20%

6 TERMINAL （端电极材料）： S-锡端头；

7 PACKAGING （包装方式）：T-编带盘装；B –散装

8 E.P.（环保）：LF—Lead Free HF—Halogen Free FP—Red Phosphor Free

APPROVED	CHECKED	PREPARED
Zeng	Lu	Yu

CUSTOMER:		REV. NO.	A0
PART NO:	MWI1812PS系列	PAGE NO:	3/5
CUST. PART NO:		DATE:	2023/10/10

4. ELECTRICAL CHARACTERISTICS

No.	Part Number	L	Freq	Q	SRF	Rdc	Idc 15%
		(μH)	(MHz)	Min.	(MHz)Min.	(Ω) Max.	(A)Max.
1	MWI1812PS2R2MST-HF	2.2	100/0.1	35	170	0.10	1.70
2	MWI1812PS3R3MST-HF	3.3	100/0.1	35	150	0.09	1.40
3	MWI1812PS4R7MST-HF	4.7	100/0.1	35	140	0.11	1.15
4	MWI1812PS100MST-HF	10	100/0.1	35	70	0.17	0.71
5	MWI1812PS220MST-HF	22	100/0.1	30	45	0.33	0.54
6	MWI1812PS470MST-H	47	100/0.1	20	28	0.87	0.35
7	MWI1812PS331MST-HF	330	100/0.1	18	5.5	5.50	0.15
8	MWI1812PS471MST-HF	470	100/0.1	16	4.0	6.90	0.12
9	MWI1812PS561MST-HF	560	100/0.1	16	2.6	8.40	0.11

产品公差：M±20%

Test remarks

(1). All test data is referenced to 25 ℃ ambient.

5. GENERAL SPECIFICATION

(1). Operating temp.: -40℃ ~ +85℃ (Including self-generated heat).

(2). Storage temp.: -10℃ ~ +40℃ R.H.:60% Max.

(3). Moisture sensitivity level (MSL) 1

(4). Recommended products should be used within 12 months from the date of delivery

(5). The part temperature (ambient + temp rise) should not exceed 85 °C under worst case operating conditions. Circuit design, component placement, PWB trace size and thickness, airflow and other cooling provisions all affect the part temperature. Part temperature should be verified in the end application.

APPROVED	CHECKED	PREPARED
Zeng	Lu	Yu

CUSTOMER:		REV. NO.	A0
PART NO:	MWI1812PS系列	PAGE NO:	4/5
CUST. PART NO:		DATE:	2023/10/10

6. SOLDERING CONDITIONS

Figure 1. Re-flow Soldering (Lead Free)

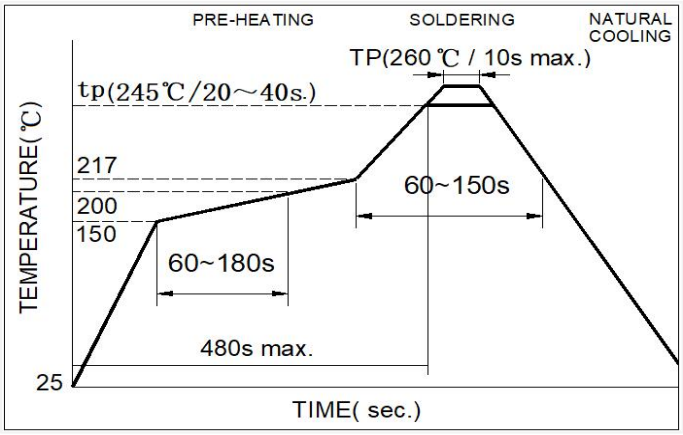

Note：

Preheat circuit and products to 150℃

260℃ tip temperature (Max)

Reflow times: no more than 2 times

Solder paste thickness: the best 0.08mm is ,but max is 0.1mm

Figure 2. Hand Soldering

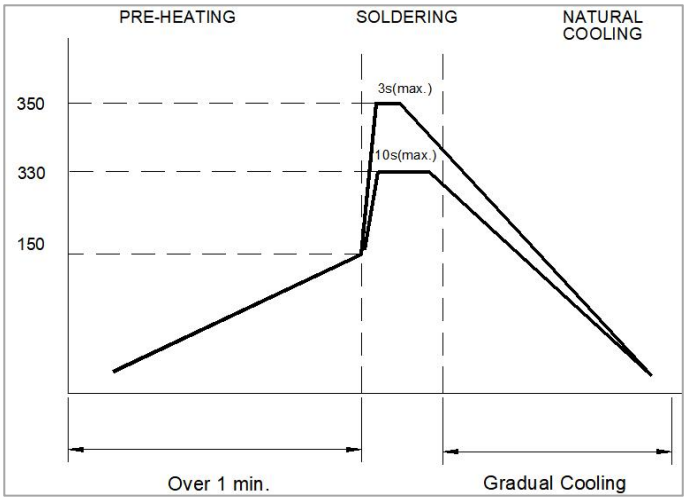



Note：

Use a 20 watt soldering iron with tip diameter of 1.0mm

Limit soldering time to 3 sec.

APPROVED	CHECKED	PREPARED
Zeng	Lu	Yu

CUSTOMER:		REV NO:	A0
PART NO:	MWI1812PS系列	PAGE NO:	5/5
CUST. PART NO:		DATE:	2025/5/5

7. PACKAGE SPECIFICATION

1.包装类型：编带装　　2.包装尺寸：☑ 13″ 盘　☐ 7″ 盘

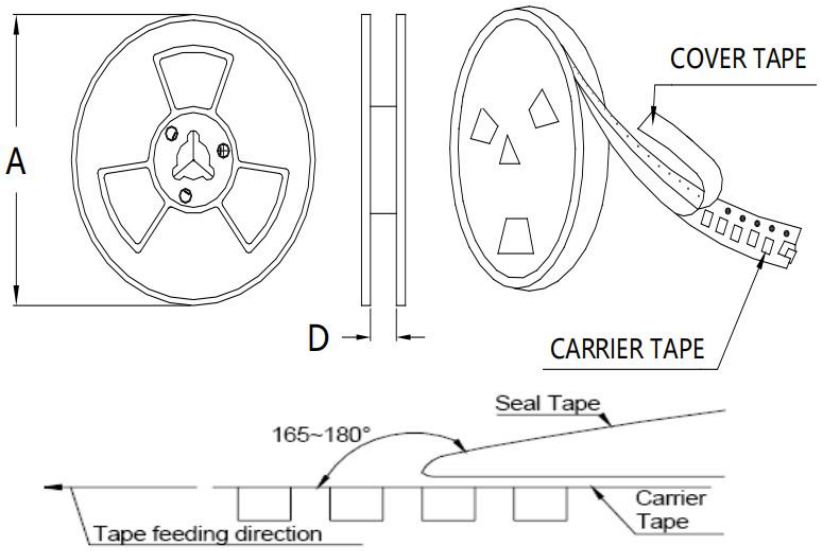

	13″ 盘	7″ 盘
A	Φ330±2.0	Φ178±2.0
D	12.5	

Peel-off strength:10～100gf.

Peel-off angle:165°-180°

Peel-off speed:300mm/min.

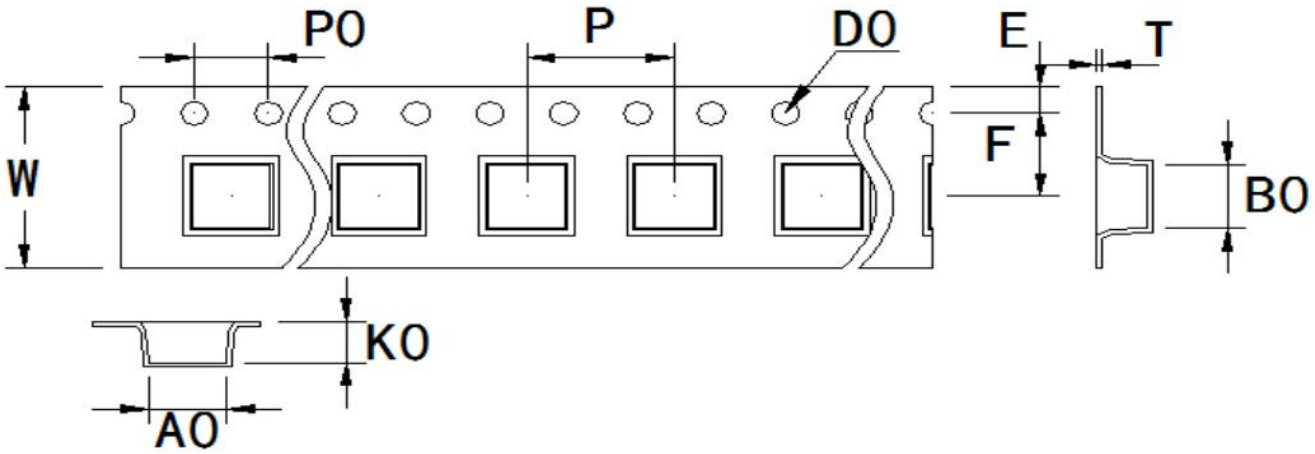

Item	W	A0	B0	K0	P	T	E	F	D0	P0
DIM(mm)	12.0±0.3	5.2±0.15	6.0±0.1	4.0±0.1	8.0±0.1	0.35±0.1	1.75±0.1	5.5±0.1	1.5±0.1	4.0±0.1

包装数量: 1500PCS / 卷

APPROVED	CHECKED	PREPARED
Zeng	Lu	Yu