SLW4018S Series

Wire Wound SMD Power Inductor

◆ Features

1、Metallization on ferrite core results in excellent shock resistance and damage-free durability;
2、Closed magnetic circuit design reduces leakage flux and Electro Magnetic Interference (EMI);
3、Low DCR decreases power loss, small and slim take up less PCB real estate;
4、Automatic production ensures high quality and consistency;



◆ Applications

1、LED Lighting;
2、Mobile devices with multifunction such as adding color TV and camera;
3、Flat-screen TVs, blue-ray disc recorders, set top boxes;
4、Notebooks, desktop computers, servers, graphic cards;
5、Portable gaming devices, personal navigation systems, personal multimedia devices;
6、Automotive systems
7、Telecomm base stations

◆ Lead Free Part Numbering

SLW	4018	S	2R2	M	S	T
(1)	(2)	(3)	(4)	(5)	(6)	(7)

(1) Series Type
(2) Dimension：A×B×C
(3) Material Code
(4) Inductance：2R2=2.2μH 100=10μH
(5) Inductance Tolerance：M=±20%, N=±30%
(6) Company Code
(7) Packaging：Tape Carrier Package

◆ Dimensions

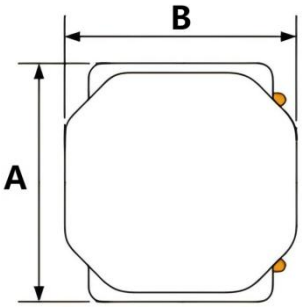

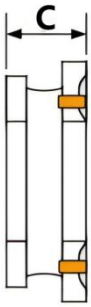

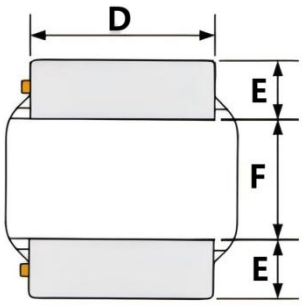

Recommended Land Pattern

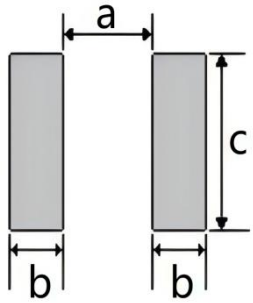

Unit:mm

Series	A	B	C	D	E	F	a Typ.	b Typ.	c Typ.
SLW4018S	4.0±0.2	4.0±0.2	1.8 Max.	3.3±0.2	0.95±0.2	2.1±0.2	1.9	1.1	3.7

◆ Electrical Characteristics

1、Operating temperature range (individual chip without packing): -40℃ ~ +125℃ （Including Self-heating）.
2、Storage temperature range (packaging conditions): -10℃ ~ +40℃ and RH 70% (Max.).

◆ Construction and material

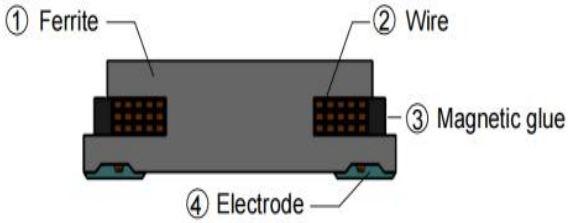

Fig.1 Body Structure

Code	Part Name	Material Name
①	Ferrite Core	Ni-Zn Ferrite
②	Wire	Polyurethane system enameled copper wire
③	Magnetic Glue	Epoxy resin and magnetic powder
④	Outer Electrodes	Top surface solder coating Sn、Ag、Cu

◆ SOLDERING CONDITIONS

Applicable soldering process to the products is refl

1、Soldering Materials

(1)Solder:Sn-3.0Ag-0.5Cu

(2)Flux:Use rosin-based flux,but not strongly acidic flux (with xhlorine exceeding 0.2wt%).Do not use water soluble flux.

2、Reflow Soldering Profile

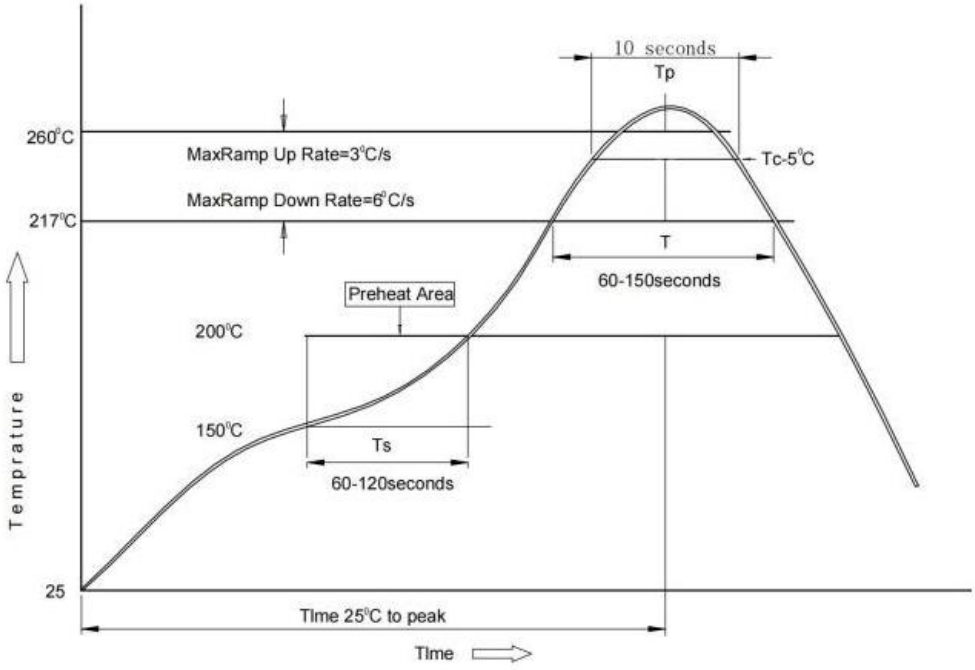

3、Soldering Iron

Reworking with electric solding iron must preheating at 150℃ for 1 minute is required,and do not directly touch the core with the tip of the soldering iron.The reworking soldering conditions are as follows.

①Temperature of soldering iron tip:350℃；
② Soldering iron power output:≤30W；
③ Diameter of soldering iron end:≤1.0mm；
④Soldering time:＜3 s

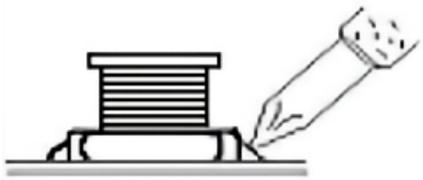

◆ Specification

Part Number	Inductance @100KHz,1V (uH)	DC Resistance(Ω)		Saturation Current(A)		Heat Rating Current(A)	
		Max.	Typ.	Max.	Typ.	Max.	Typ.
		DCR		Isat		Irms	
SLW4018S Series							
SLW4018SR47NST	0.47±30%	0.018	0.014	4.30	5.20	4.00	4.50
SLW4018SR68NST	0.68±30%	0.026	0.020	4.90	5.60	3.30	3.80
SLW4018S1R0MST	1.0±20%	0.033	0.025	4.80	5.20	2.00	3.30
SLW4018S1R5MST	1.5±20%	0.039	0.030	3.35	4.00	1.80	3.20
SLW4018S2R2MST	2.2±20%	0.059	0.045	2.70	3.20	1.65	2.60
SLW4018S3R3MST	3.3±20%	0.091	0.070	2.45	2.90	1.23	2.10
SLW4018S4R7MST	4.7±20%	0.117	0.090	1.70	2.20	1.20	1.80
SLW4018S6R8MST	6.8±20%	0.143	0.110	1.45	2.00	1.06	1.50
SLW4018S100MST	10±20%	0.234	0.180	1.30	1.60	0.84	1.20
SLW4018S150MST	15±20%	0.325	0.250	0.94	1.10	0.65	1.00
SLW4018S220MST	22±20%	0.468	0.360	0.80	0.88	0.59	0.85
SLW4018S330MST	33±20%	0.689	0.530	0.56	0.75	0.49	0.72
SLW4018S470MST	47±20%	0.845	0.650	0.57	0.70	0.42	0.65
SLW4018S680MST	68±20%	1.300	1.000	0.47	0.51	0.32	0.52
SLW4018S101MST	100±20%	2.275	1.750	0.40	0.44	0.25	0.41
SLW4018S151MST	150±20%	3.250	2.500	0.31	0.34	0.22	0.36
SLW4018S221MST	220±20%	5.200	4.00	0.27	0.30	0.17	0.27

Notes

1. All test data is referenced to 25 °C ambient.
2. Isat: DC current at which the inductance drops approximate 30% from its value without current.
3. Irms :DC current that will cause an approximate ΔT of 40 °C(reference ambient temperature is 25 °C).

◆ Reliability Test

TEST ITEM	SPECIFICATION	TEST CONDITION
High temperature Storage test	1. No significant defects in appearance. 2.ΔL/L≦10% 3.ΔDCR/DCR≦10%	Temperature:125℃±5℃(N: Follow theproduct specification for the setting.) Time : 96±2 hours Place the samples for one hour at room temperature and test them within two hours
Low temperature Storage test	1. No significant defects in appearance. 2.ΔL/L≦10% 3.ΔDCR/DCR≦10%	Temperature: -40℃±5℃ (M: Follow the product specification for the setting) Time : 96±2 hours Place the samples for one hour at room temperature and test them within two hours.
Humidity test	1. No significant defects in appearance. 2.ΔL/L≦10% 3.ΔDCR/DCR≦10%	Temperature: 40±2℃ , Humidity: 93±3%RH Time : 96±2 hours Place the samples for one hour at room temperature and test them within two hours
Solderability test	Terminals must have 95% minimum solder coverage	1.Dip pads in flux then dip in solder pot at 245±5°C for 5 second. 2.Solder: lead free 3.Flux: rosin flux
Heat endurance of flow soldering	1. No significant defects in appearance. 2.ΔL/L≦10% 3.ΔDCR/DCR≦10%	1.Refer to the above reflow curve and go through the reflow for twice. 2.The peak temperature : 260+0/-5℃
Vibration test	1. No significant defects in appearance. 2.No short and no open.	Apply frequency 10~55~10Hz and amplitude 1.5mm, 1 min/cycle in X Y and Z direction for 2 hours each. (total 6 hours)
Terminal strength push test	1. Applied force:10N Duration: 10sec 2.Solder paste thickness:0.12mm 3.Meet the above requirements without any loosetermina	older the test samples to the PCB through245 ℃ reflow, apply a standard force on the side of the test samples for 10 seconds. 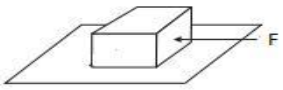

◆ Packaging and Marking:

1.Tape Packaging Dimensions

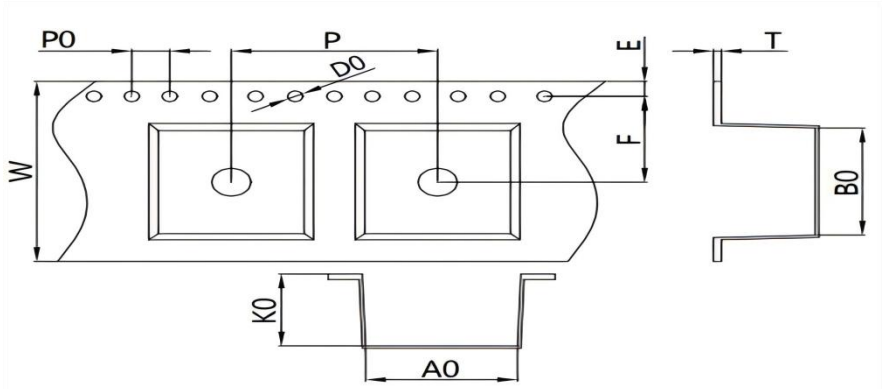

Type	W	P	A0	B0	K0	T	E	F	P0	D0
SLW4018S	12.0 ±0.30	8.00 ±0.30	4.40 ±0.30	4.40 ±0.30	2.00 ±0.20	0.30 ±0.10	1.75 ±0.10	5.50 ±0.10	4.00 ±0.20	1.50 ±0.10

2.Leader and blank portion

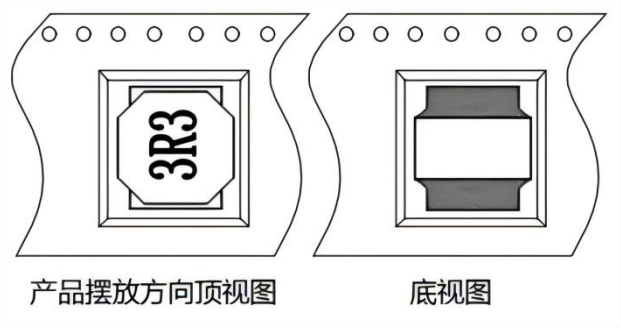

3.Reel Dimensions（Unit：mm）

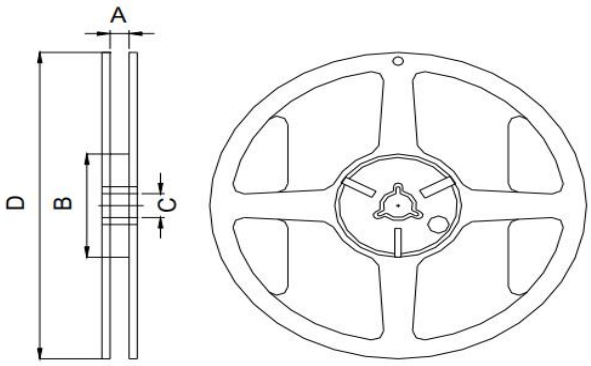

A(mm)	12.5
B(mm)	100
C(mm)	13.0
D(mm)	330±2.0

4.Packaging Quantity

Type	Standard Quantity		
	Reel	Inner box	Carton box
SLW4018S	3000 pcs / reel	4Reel / box (12000 pcs)	3 Inner boxes, (36000 pcs)