TPSMS12CT1G

Uni-direction ESD Protection Array

WWW.TECHPUBLIC.COM

Features

- Low operating voltage: 12V
- Ultra low capacitance: 60pF
- Ultra low leakage: nA level
- Low clamping voltage
- -IEC 61000-4-2 (ESD) immunity test

  Air discharge: ±30kV

  Contact discharge: ±30kV

-IEC61000-4-4 (EFT) 40A (5/50ns)

-IEC61000-4-5(Lightning):12A(8/20μs)

- These are Pb−Free Devices
- Response Time is Typically < 1 ns

Mechanical Characteristics

- Package: SOT23-6
- Lead Finish: Matte Tin
- Case Material: “Green” Molding Compound
- Terminal Connections: See Diagram Below
- - IEC 61000-4-2 (ESD) immunity test

Applications

- Cellular Handsets and Accessories
- Notebooks and Handhelds
- Portable Instrumentation
- Industrial Controls

Dimensions and Pin Configuration

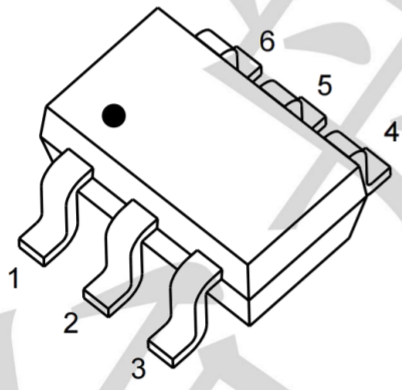

SOT23-6

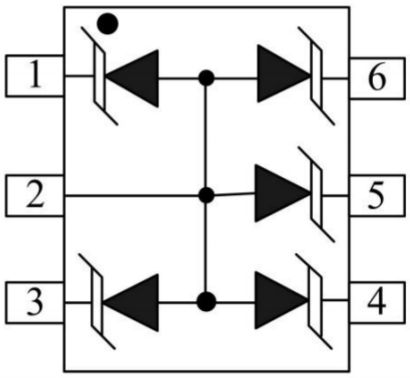

Circuit and Pin Schematic

Absolute Maximum Ratings(Tamb=25°C unless otherwise specified)

Parameter	Symbol	Value	Unit
Peak Pulse Power (8/20μs)	Ppp	350	W
Peak Pulse Current (8/20μs)	Ipp	12	A
ESD per IEC 61000−4−2 (Air) ESD per IEC 61000−4−2 (Contact)	VESD	±30 ±30	KV
Operating Temperature Range	TJ	−55 to +125	°C
Storage Temperature Range	Tstg	−55 to +150	°C

Electrical Characteristics (TA=25°C unless otherwise specified)

Parameter	Symbol	Min	Typ	Max	Unit	Test Condition
Reverse Working Voltage	VRWM	--	--	12	V	Any I/O pin to ground
Breakdown Voltage	VBR	13.3	14.4	16	V	IT= 1mA,Any I/O pin to ground
Reverse Leakage Current	IR	--	--	1	uA	VRWM=12V,Any I/O pin to ground
Forward Voltage	VF	0.5	0.8	1.0	V	IF = 10mA
Clamping Voltage	VC	--	20	--	V	Ipp=1A(8x 20us pulse), I/O pin to ground
Clamping Voltage	VC	--	25	30	V	Ipp=12A(8x 20us pulse), I/O pin to ground
Junction Capacitance	Cvo-GND	--	--	60	pF	VR=0V,f=1MHz, Any I/O to GND
	$C_{I/O-I/O}$	--	--	30	pF	VR=0V,f=1MHz, between I/O pins

Symbol	Parameter
V_C	Clamping Voltage @ I_{PP}
I_{PP}	Peak Pulse Current
V_{BR}	Breakdown Voltage @ I_T
I_T	Test Current
I_R	Reverse Leakage Current @ V_{RWM}
V_{RWM}	Reverse Standoff Voltage
V_F	Forward Voltage@ I_F
I_F	Forward Current

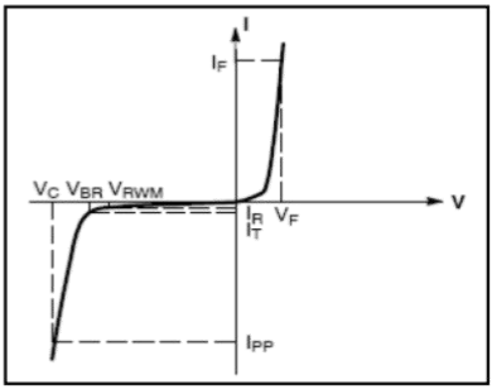

V-I characteristics for a uni-directional TVS

Characteristic Curves

Fig1. 8/20μs Pulse Waveform

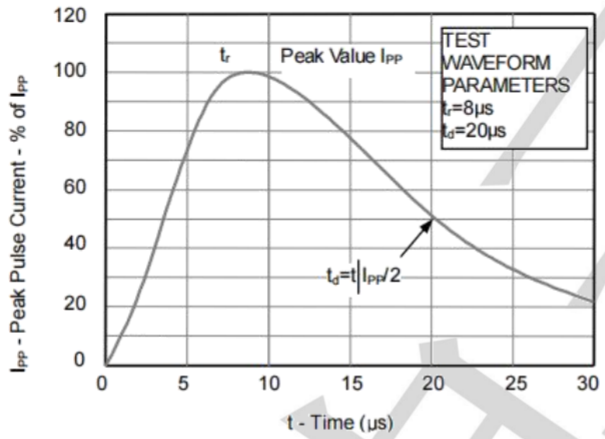

Fig2. ESD Pulse Waveform (according to IEC 61000-4-2)

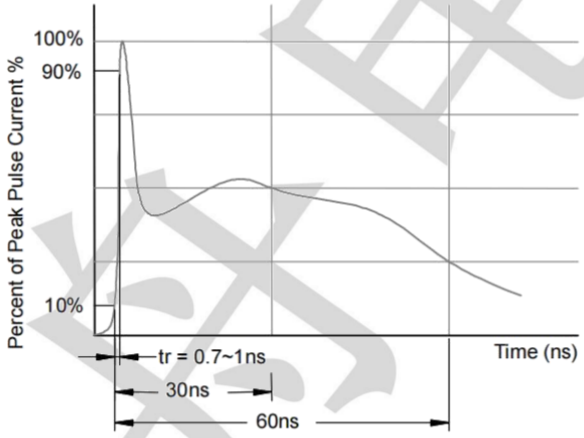

Fig3. Power Derating Curve

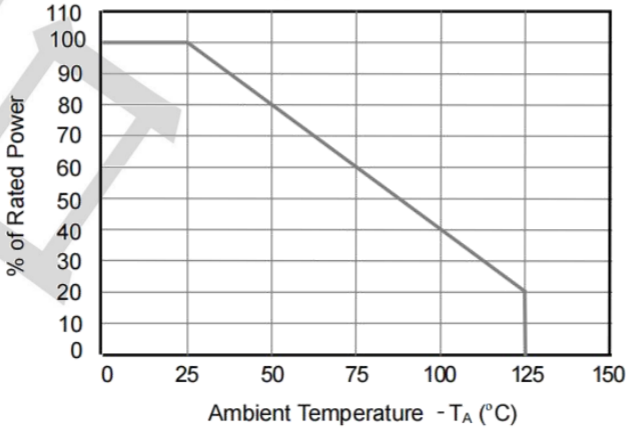

Package informantion

SOT23-6 (Unit: mm)

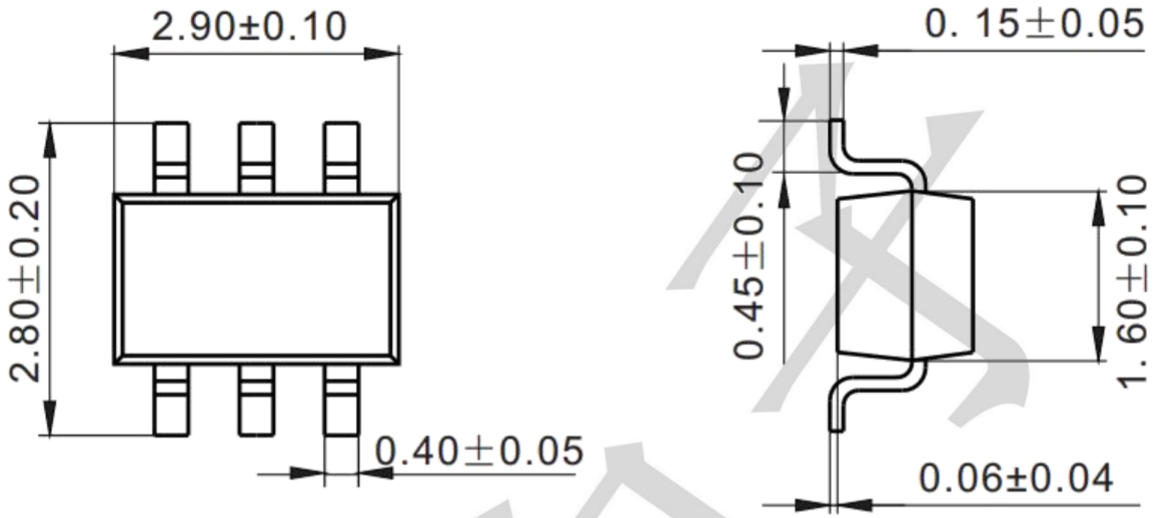

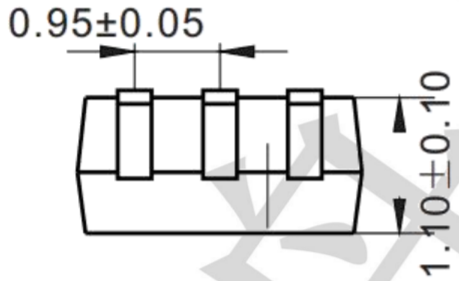

Mounting Pad Layout (unit: mm)

