| linear dimension(Tolerances Standard GB/T 14486-2008) | | | | | | | | — | ▱ | ⊥ |
|---|---|---|---|---|---|---|---|---|---|---|
| variable range | to 6 | over 6 to 10 | over 10 to 30 | over 30 to 60 | over 60 to 100 | over 100 to 160 | over 160 to | to 10 | over 10 to 100 | over 100 to |
| tolerance | ±0.20 | ±0.30 | ±0.50 | ±0.70 | ±1.00 | ±1.30 | ±1.60 | 0.10 | 0.30 | 0.60 |

| REVISION RECORD | | | | |
|---|---|---|---|---|
| REV. | DESCRIPTION | ECN No. | APPROVED | DATE |
| A | 新发行 | | CLF | 25. 05. 08 |
| B | 版本更新 | | CLF | 26. 10. 15 |
| | | | | |
| | | | | |

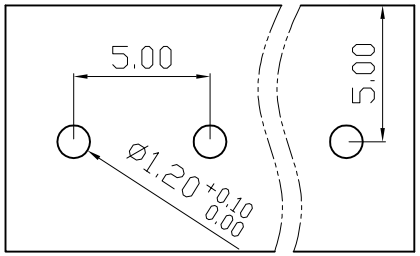


PCB LAYOUT

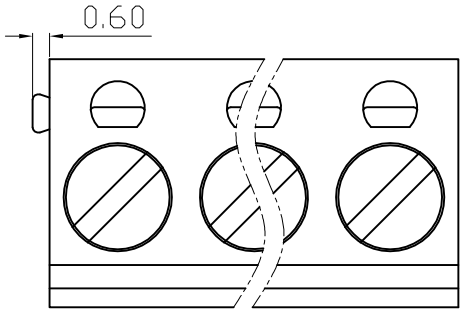


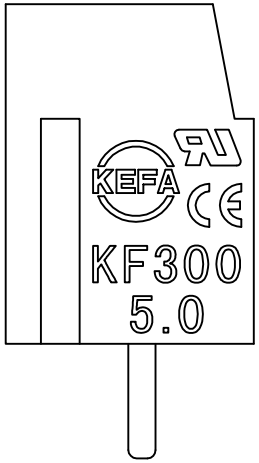


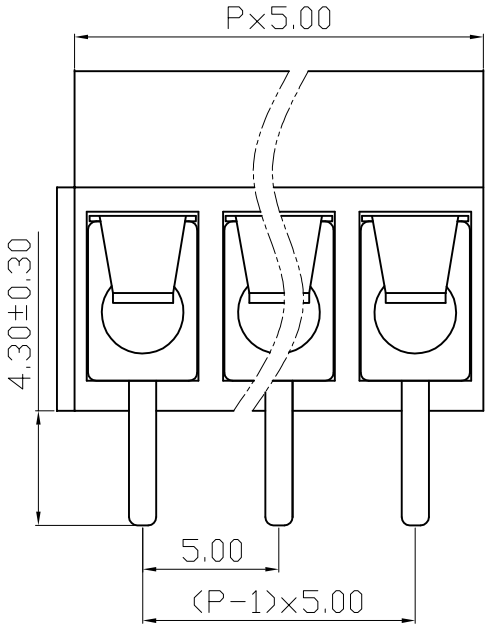


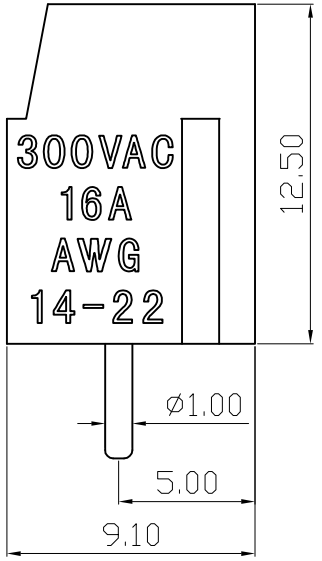


| UL/CUL 技术 参数 UL/CUL Technical Data | | | |
|---|---|---|---|
| 等 级 Use Group | B | C | D |
| 额定电压 Rated Voltage [V] | 300 | - | 300 |
| 额定电流 Rated Current [A] | 16 | - | 10 |
| 接线范围 Wire Range 单/多芯线 Solid/Stranded [AWG] | 22-14 | | |
| 耐电压 Withstanding Voltage | AC1600V/Min | | |
| IEC 技术参数 IEC Technical Data | | | |
| 过电压类别 Overvoltage Category | III | III | II |
| 污染等级 Contamination Class | 3 | 2 | 2 |
| 额定电压 Rated Voltage [V] | 250 | 400 | 500 |
| 额定电流 Rated Current [A] | 17 | 17 | 17 |
| 额定冲击电压 Impulse withstand voltagea [KV] | 4.0 | 4.0 | 4.0 |
| 导线截面积 Conductor cross section 硬质/柔性导线 Solid/ flexible [mm²] | 1.5 | | |
| 材 料 Material | | | |
| 绝缘材料 Insulation Material | PBT | | |
| 阻燃等级 Imflammability | UL94V-0 | | |
| 导体材料 Contactor Material | 铜合金 Copper alloy | | |
| 导体表面镀层 Contactive Coating | 镀锡 Tin Plated | | |
| 一般参数 Other Data | | | |
| 间距 Pitch [mm] | 5.0 | | |
| 极数 Poles [P] | 2-24 | | |
| 剥线长度 Stripping Length [mm] | 4-5 | | |
| 螺丝 Screw/扭矩 Torque(Max) [N.m] | M3.0/0.5 | | |
| 工作温度 Operating temperatur [°C] | -30~+120 | | |
| 引针尺寸 Pin Dimensions [mm] | 4.3 | | |
| PCB板孔径 PCB Hole Diameter [mm] | 1.2 | | |
| 安装类型 Mounting type | 波峰焊/Wave soldering | | |

| DES. | ZC | DATE | 26.10.15 | 单位 / UNITS | mm | 尺寸 / SIZE | A4 | 比例 / SCALE | 1:1 | 第三视角/THIRD ANGLE PROJECTION | 版本 / REV | B |
|---|---|---|---|---|---|---|---|---|---|---|---|---|
| CHK. | SJD | DATE | 26.10.15 | KEFA® 慈溪市科发电子有限公司 CIXI KEFA ELECTRONIC CO., LTD | | | | | | 名称 / TITLE | KF300-5.0 | |
| APP. | CLF | DATE | 26.10.15 | | | | | | | | | |