增 益 实 业

零 件 承 认 书

SPECIFICATION FOR APPROVAL

客户名称: 0110

客户料号:

增益型号: ZEHP0630-1R0-M

规格描述:

日　　期: 2025/09/04

版　　本: S20250904

增益签核:

制订	审核	核准
张翔	刘业明	柯文学

客户签核:

工程	审核	核准

东莞市增益实业有限公司
地址：东莞市塘厦镇林村塘厦大道北552号1-911
电话：0769-87321000
传真：0769-87891229

物料类型:	一体成型电感
日　　期:	2025/09/04
版　　本:	S20250904

图 面 规 格 变 更 履 历 表

增益版本	变更内容	日期	制定	审核	核准
A	初版	2023/12/24	张翔	刘业明	柯文学
S20250904	修改严谨规范型号的阻抗值以及饱和电流和额定电流值和整体版本的内容更新	2025/09/04	张翔	刘业明	柯文学

东莞市增益实业有限公司

地址：东莞市塘厦镇林村塘厦大道北552号
电话：0769-87321000
传真：0769-87891229

物料类型：	一体电感
日 期：	2025/9/04
版 本：	S20250904

Molded Power Inductor ZEHP0630 Series

一体成型电感ZEHP0630系列



Operating Temp:-40~125℃
工作温度：-40~125℃

BASIC INFORMATION 基本信息

Features 特性

▶Low loss alloy powder for large current and low DCR
低损耗合金粉材料、高饱和电流、低 DCR
▶High quality materials, low magnetic loss and high efficiency
优质材料、磁损低、效率高
▶Closed magnetic circuit design reduces leakage flux
闭合磁路设计、漏磁干扰小
▶Strong anti electromagnetic interference, ultra low buzzer
抗电磁干扰强、超低蜂鸣声

Applications 用途

▶Notebooks,tablets
笔记本电脑、平板电脑
▶High frequency switching power supply, UPS power supply, graphics cards, audio amplifiers
高频开关电源、UPS 电源、显卡、音箱功放
▶Netcom, security
网通、安防
▶Video equipment, set-top boxes, DVD players
视像设备、机顶盒、DVD 机

PART NUMBERING SYSTEM 品名系统

ZEHP 0630 - 2R2 - M
① ② ③ ④

①类型

②外形尺寸规格：0630

③感值：2R2=2.2uH

④电感公差：M=±20%

SCHEMATIC

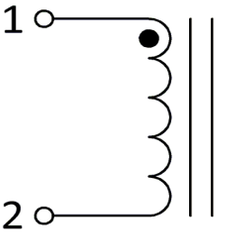

◎Dimensions (unit:mm) 尺寸(单位)

Outline Dimensions 外形尺寸

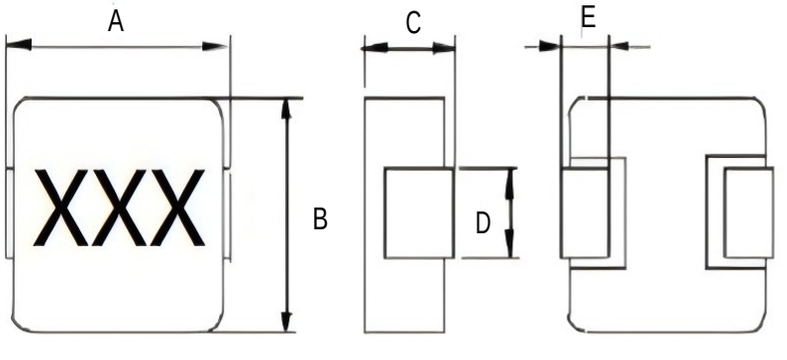

Recommended pad size 推荐焊盘尺寸

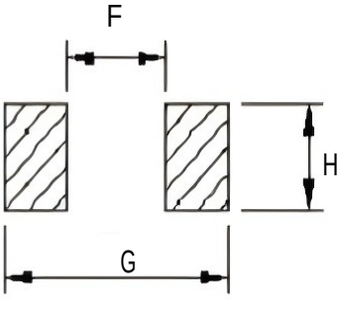

Part No	ITEM							
	A	B	C	D	E	F	G	H
ZEHP0630	7.0±0.3	6.60±0.20	2.8±0.2	3.0±0.3	1.6±0.3	3.70	8.4	3.50

Electrical Characteristics 电气特性

ZEHP0630 Series

Part No	Inductance 100KHz 1.0V		DCR(mΩ)		Saturation Current	Heating Rating Current
	L(uH) '@0A	Tol	Typical	Max	Isat(A) Typical	Irms(A) Typical
ZEHP0630-R10-M	0.10	±20%	0.90	1.54	60.00	44.00
ZEHP0630-R15-M	0.15	±20%	1.41	2.18	52.00	33.00
ZEHP0630-R22-M	0.22	±20%	1.45	2.72	40.00	26.40
ZEHP0630-R33-M	0.33	±20%	3.00	3.18	35.00	23.10
ZEHP0630-R47-M	0.47	±20%	3.72	4.10	27.00	19.80
ZEHP0630-R56-M	0.56	±20%	4.00	4.10	25.00	18.15
ZEHP0630-R68-M	0.68	±20%	4.31	4.81	25.00	17.60
ZEHP0630-R82-M	0.82	±20%	5.30	5.45	24.00	15.40
ZEHP0630-1R0-M	1.00	±20%	6.72	8.36	22.00	13.20
ZEHP0630-1R5-M	1.50	±20%	11.00	12.00	18.00	13.20
ZEHP0630-2R2-M	2.20	±20%	13.63	15.00	14.00	10.50
ZEHP0630-3R3-M	3.30	±20%	20.00	26.00	12.00	9.35
ZEHP0630-4R7-M	4.70	±20%	30.00	38.00	9.90	6.60
ZEHP0630-5R6-M	5.60	±20%	38.18	42.00	8.50	6.05
ZEHP0630-6R8-M	6.80	±20%	43.65	48.00	8.00	5.50
ZEHP0630-8R2-M	8.20	±20%	54.54	65.00	6.05	5.50
ZEHP0630-100-M	10.00	±20%	61.80	68.00	6.05	4.95
ZEHP0630-150-M	15.00	±20%	103.00	115.00	5.00	3.85
ZEHP0630-220-M	22.00	±20%	126.00	135.00	3.85	3.08
ZEHP0630-330-M	33.00	±20%	230.00	270.00	3.00	2.20
ZEHP0630-470-M	47.00	±20%	290.00	350.00	2.20	1.80

◎Notes 注意事项：

1. All test data is referenced to 25 °C ambient　所有测试数据均参考25°C环境温度

2. Operating temperature range - 40 °C to + 125 °C　工作温度范围-40°C至+125°C

3. Irms (A):DC current (A) that will cause an approximate ΔT of 40 °C(reference ambient temperature is 25 °C)　Irms（A）：将导致大约40°CΔT的直流电流（A）（参考环境温度为25°C）

4. Isat(A):DC current (A) that will cause L0 to drop approximately 30 %
Isat（A）：将导致L0下降约30%的直流电流（A）

5. The part temperature (ambient + temp rise) should not exceed 125 °C under worst case operating conditions.Circuit design, component placement, PWB trace size and thickness, airflow and other cooling provisions all affect the part temperature. Part temperature should be verified in the end application.
在最坏的操作条件下，零件温度（环境温度+温升）不应超过125°C。电路设计、部件放置、PWB迹线尺寸和厚度、气流和其他冷却措施都会影响零件温度。应在最终应用中验证零件温度。

● 可靠性 Reliability Data

项目 Items	要求 Requirements	试验方法及备注 Test Methods and Remarks
工作温度范围 Operating Temperature Range	-40℃～+125℃	包括自身发热的上升温度。 Including self-heating temperature rise.
可焊性 Solderability	电极面 90%以上覆盖新的焊料。 90% or more of electrode area shall be coated by new solder.	在 245 ℃±5 ℃ 熔融的焊锡（96.5Sn/3.0Ag/0.5Cu）中浸 5 s±1 s。 Dip pads in flux and dip in solder pot (96.5Sn/3.0Ag/0.5Cu) at 245 ℃±5 ℃ for (5±1) seconds.
耐焊接热 Resistance to Soldering Heat	外观无可见机械损伤； 电感量变化率：±10%以内。 No visible mechanical damage. Inductance change:Within ±10%	在 260 ℃±5 ℃ 熔融的焊锡（96.5Sn/3.0Ag/0.5Cu）中浸 10 s±1 s。 Dip pads in flux and dip in solder pot (96.5Sn/3.0Ag/0.5Cu) at 260℃±5 ℃ for (10±1) seconds.
耐低温 Low temperature	外观无可见机械损伤； 电感量变化率：±10%以内。 No visible mechanical damage. Inductance change: Within ±10%	温度-40 ℃±2℃，时间 1000 小时 Temperature-40±2℃ for total 1000hr.
耐高温 High temperature	外观无可见机械损伤；电感量变化率：±10%以内。 No visible mechanical damage. Inductance change: Within ±10%	温度 125 ℃±2℃，时间 1000 小时 Temperature125±2℃ for total 1000hr.
恒定湿热 Static Humidity	外观无可见机械损伤；电感量变化率：±10%以内。 No visible mechanical damage. Inductance change: Within ±10%	将电感器放置在于湿度(93±3)%RH,温度 40 ℃±2 ℃的环境中存放 96 h±2 h，在室温下放置 2 小时后、48 小时内测试。 Inductors shall be subjected to (93±3)%RH . at 40 ℃±2 ℃ for 96 h±2 h .Inductors are to be tested after having air dried for 2 hours.

温度变化 Thermal shock	外观无可见机械损伤；电感量变化率：±10%以内。 No visible mechanical damage. Inductance change: Within ±10%	-40±3℃/30±3min↔85℃±2℃/30±3min 转换时间 2~3min,循环 5 次； 在室温下放置 2 小时后、48 小时内测试。 The test sample shall be placed at -40±3℃/30±3min and 85±2℃/30±3min different temperature conversion time is 2~3 minutes. The temperature cycle shall be repeated 5 cycles.
机械冲击 Mechanical Shock	 电感无出现电极脱落、断线现象。 No evidence of terminal peel off and wire broken.	把电感焊在厚度为 1.0mm 的基板上,并固定在黄铜制 15cm 大,重 1.4Kg 的立方体内,然后从 0.5m 高度往地板自然下落(X,Y,Z 方向各一回) Inductors shall be Soldering on the PCB with 1.0mm thick and fixed them in a 15cm big.,1.4Kg weight cube with brass base, let it nature fallen form 0.5m height (X,Y,Z three axes)
端子强度 Adhesion of terminal electrode	端子与本体结合无松动、脱落。 Strong bond between the pad and the core, without come off PC board.	将电感器用 260±5℃/20±5s 焊在带有 0.3mm 厚锡膏的基板上，然后用冶具垂直电极面方向加压 10 N，10±1s。 Inductors shall be subjected to 260±5℃ for 20±5s Soldering in the base whit 0.3mm solder. And then aplomb electrode way plus tax 10 N for 10±1s seconds.

● 环保情况说明 Environmental Protection Statement

RoHS 指令：本公司产品符合 RoHS 指令。
Response to RoHS directive：Our products are RoHS compliance.

● 推荐使用的焊接曲线 Recommended soldering profile30～130gf

本产品建议使用回流焊接法。
Applicable soldering process to the products is reflow soldering.

焊接材料 Soldering Materials

①焊料：96.5Sn-3.0Ag-0.5Cu

Solder: 96.5Sn-3.0Ag-0.5Cu

②助焊剂：使用松香基助焊剂，禁止使用卤化物含量超过 0.2wt%的强酸性助焊剂和水溶性助焊剂。
Flux: Use rosin-based flux, but not strongly acidic flux (with chlorine exceeding 0.2 wt%). Do not use water-soluble flux.

焊接曲线 Soldering Profile

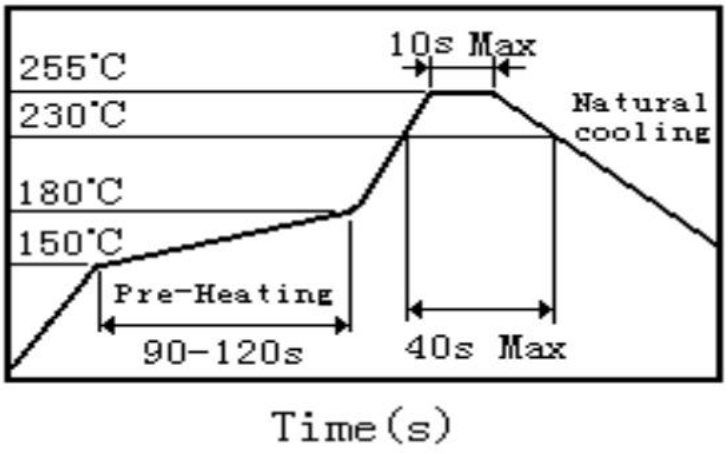

● 验收规则 Inspection Rules

产品的验收按 GB/T2828.1-2012 规定进行,其检查水平: CR(致命缺陷)：0.01，MA(严重缺陷)：0.04，MI(次要缺陷)：1.0。
The inspection must be performed per GB/T2828.1-2012,with its examination level: CR(Critical Defect)：0.01，MA(Major defects)：0.04，MI(Minor defect)：1.0 .

客户收到产品后一个月内须验收完毕,并将验收结果书面通知供货方,否则视为已验收合格。
The customer shall complete the acceptance inspection within one month after receiving the product, and notify the supplier of the acceptance result in writing; otherwise the product shall be deemed to have passed the acceptance inspection.

◎Dimension of plastic taping 塑料胶带尺寸（Unit单位: mm）:

Tape Carrier Packaging 胶带载体包装:

Series 系列	Standard Quantity (pcs/reel) 标准数量（个/卷）
0630	1000

STYLE	A(mm)	C(mm)
13"	330±1.5	19±0.5
G(mm)	N(mm)	
13±0.5	100±1	

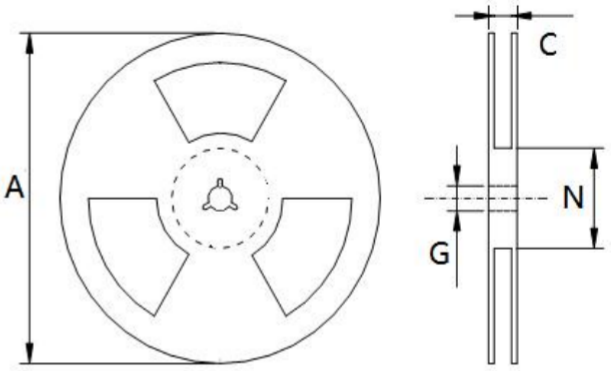

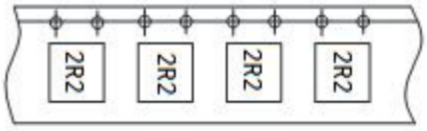

字头朝孔(示例)

Series 系列	W	A0	B0	D	E	F	K0	P0	P2	P	T
	±0.30	±0 .10	±0 .10	±0 .10	±0. 10	±0. 10	±0 .10	±0. 10	±0. 10	±0. 10	±0 .05
0630	16.00	7.70	8.30	1.50	1.75	7.50	3.50	4.00	2 .00	12.00	0.40

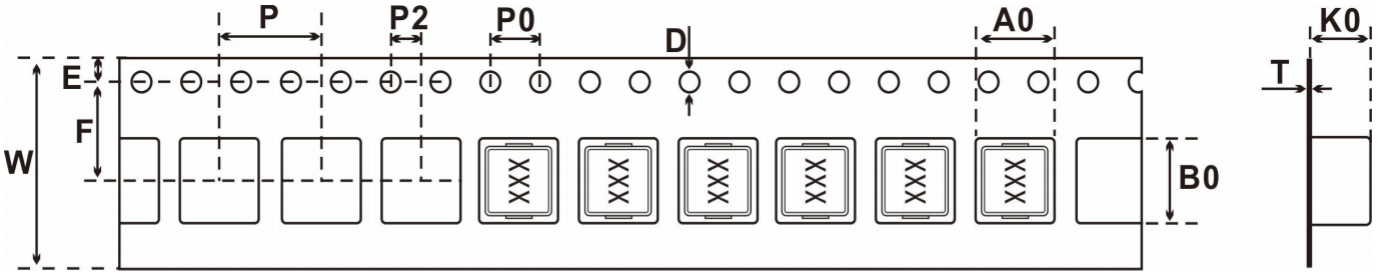

◎Peel force of top cover tape 顶盖胶带剥离力

The peel speed shall be about 300mm/minute 剥离速度约为300mm/分钟

F Force magnitude F 力大小：20～100g

Stripping angle of facial tape 面带剥离角度：165°～180°。

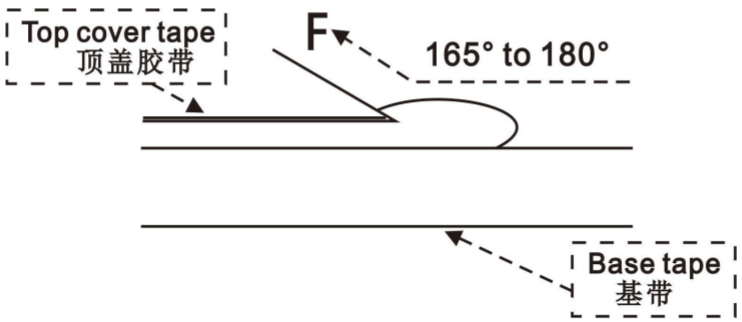

● 贮存方法 Storage Methods

存储期限 Storage Period

为保证端子电极的焊接特性和包装材料处于良好状态，请于本公司发货后 6 个月内使用本产品。同时，由于端子电极的焊接特性会随时间发生变化，如果贮存时间超过 6 个月，请首先确认其焊接特性后再安装使用。

To maintain the solderability of terminal electrodes and to keep the packing material in good condition, product should be used within 6 months from the time of delivery. And the solderability of products electrodes may decrease as time passes, so in case of storage over 6 months, slderability shall be checked before actual usage.

存储条件 Storage Conditions

①存放货物的仓库应满足以下条件：

温度: -10 ~ +40℃　　相对湿度: 30~70%RH

Store products in a warehouse in compliance with the following condition:

Temperature: -10 to +40℃　　Humidity: 30~70%RH

②不要使产品遭受温度和湿度的快速变化。

Do not subject products to rapid changes in temperature and humidity.

③不要将产品存放在化学环境中，如硫酸气体或碱性气体中，否则会降低电极端子的焊接特性和使电感器腐蚀。

Do not store the products in chemical atmosphere such as one containing sulfurous acid gas or alkaline gas, that will causes poor solderability and corrosion of inductors.

④不要以散包装的形式存放产品以防止电感器间的相互碰撞造成磁芯破裂或断线。

Do not store products in bulk packaging to prevent collision among inductors which causes core chipping and wire breakage.

⑤为了避免受潮气、灰尘等物质的影响，产品应保管于货架上。

Store products on pallets to protect from humidity, dust, etc.

⑥产品应避免热冲击、振动以及直接光照等等。

Avoid heat shock, vibration, direct sunlight, etc.

● 使用注意事项 Precautions For Use

(1)本公司产品适用于 AV 设备、OA 设备、家电、信息服务等一般电子设备中。
(2)当本公司的产品使用在一般电子设备以外的领域时，对于此所引发的设备失效我司将不承担任何法律责任。
(3)本目录书只保证我司产品作为一个单体时的质量情况，当我司产品被安装到贵司产品上时，请贵司对使用在贵司电路上的产品情况进行了有效评价和确认。
(4)不要对产品施加过大的振动或机械冲击；
(5)为防止断线，请不要使用锋利的物体接触线圈，如镊子；
(6)在产品贴装时不要使用过大的压力，避免磁芯断裂。

(1)Our products are designed and promoted for use in general enectronic devices such as audio-equipment, office automation equipment, home electic appliance and information service.
(2)In case of using the product for the purpose other than general electronics devices, we shall not be held liable for any dysfunctions in or damage to the equipment with which the product is used.
(3)Our specification limits the quality of the component as a single unit. Please ensure the component is thoroughly evaluated in your application circuit.
(4)Do not apply excessive vibration or mechanical shock to products.
(5)Do not touch wire with sharp objects such as tweezers to prevent wire breakage.
(6)Do not apply excessive stress to products mounted on boards to prevent core breakage.