I²C-Compatible Serial E²PROM

Features

- Single Supply Voltage and Support Fast and High Speed Mode
  - Minimum operating voltage down to 1.7 V
  - 400 kHz/1 MHz/3.4 MHz clock from 1.7 V to 5.5 V
- Low power CMOS technology
  - Read current 0.5 mA (5.5 V 400 kHz, typical)
- Schmitt Trigger, Filtered Inputs for Noise Suppression
- Transparent ECC on each group of four bytes which can correct 1 bit error
- Write protect of the whole memory array
- Additional write lockable page (Identification page)
- Additional 128 bits Serial Number (Unique ID)
- Sequential & Random Read Features
- 128 bytes Page Write Modes, Partial Page Writes Allowed
- Self-timed Write Cycle (5 ms maximum)
- High Reliability
  - Endurance: 10 Million Write Cycles
  - Data Retention: 200 Years
  - HBM: 6 kV
  - Latch up Capability: ±200 mA(25°C)
- Package: DIP8, SOP8, TSSOP8, MSOP8, DFN8,SOT-23-5



Ordering Information

DEVICE	Package Type	MARKING	Packing	Packing Qty
AT24C512N	DIP-8	24C512	TUBE	2000pcs/box
AT24C512M/TR	SOP-8	24C512	REEL	2500pcs/reel
AT24C512MM/TR	MSOP-8	C512	REEL	3000pcs/reel
AT24C512MT/TR	TSSOP-8	C512	REEL	5000pcs/reel
AT24C512DQ3/TR	DFN-8 3*3	C512	REEL	5000pcs/reel
AT24C512M5/TR	SOT-23-5	FBMU	REEL	3000pcs/reel

1. General Description

The AT24C512 is I2C-compatible Serial EEPROM (Electrically Erasable Programmable Memory) device. It contains a memory array of 512 Kbits (64 Kbytes), which is organized in 128 bytes per page.

1.1 Pin Configuration

Figure 1-1 Pin Configuration

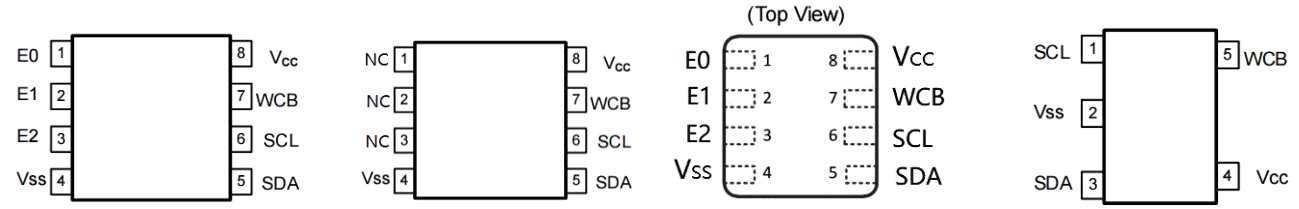

DIP-8/SOP-8/MSOP-8 TSSOP-8 DFN-8 3*3 SOT-23-5

1.2 Pin Definition

Table 1-1 Pin Definition for DIP8/SOP8/MSOP8/TSSOP8/DFN8 Packages

Pin	Name	Type	Description
1	E0	Input	Slave Address Setting
2	E1	Input	Slave Address Setting
3	E2	Input	Slave Address Setting
4	Vss	Ground	Ground
5	SDA	I/O	Serial Data Input and Serial Data Output
6	SCL	Input	Serial Clock Input
7	WCB	Input	Write Control, Low Enable Write
8	VCC	Power	Power

Table 1-2 Pin Definition for SOT23-5 Packages

Pin	Name	Type	Description
1	SCL	Input	Serial Clock Input
2	Vss	Ground	Ground
3	SDA	I/O	Serial Data Input and Serial Data Output
4	V_{CC}	Power	Power
5	WCB	Input	Write Control, Low Enable Write

1.3 Pin Descriptions

Serial Clock (SCL): The SCL input is used to positive-edge clock data in and negative-edge clock data out of each device.

Serial Data (SDA): The SDA pin is bidirectional for serial data transfer. This pin is open drain driven and may be wire-OR'ed with any number of other open-drain or open-collector devices.

Device Addresses (E2, E1, E0): The E2, E1, and E0 pins are device address inputs. Typically, the E2, E1, and E0 pins are for hardware addressing and a total of 8 devices can be connected on a single bus system. If these pins are left floating, the E2, E1, and E0 pins will be internally pulled down to Vss.

Write Control (WCB): The Write Control input, when WCB is connected directly to VCC, all write operations to the memory are inhibited. When connected to Vss, allows normal write operations. If the pin is left floating, the WCB pin will be internally pulled down to Vss.

Supply Voltage (V_{CC}): V_{CC} is the supply voltage.

Ground (Vss): Vss is the reference for the V_{CC} supply voltage.

2. Block Diagram

Figure 2-1 Block Diagram

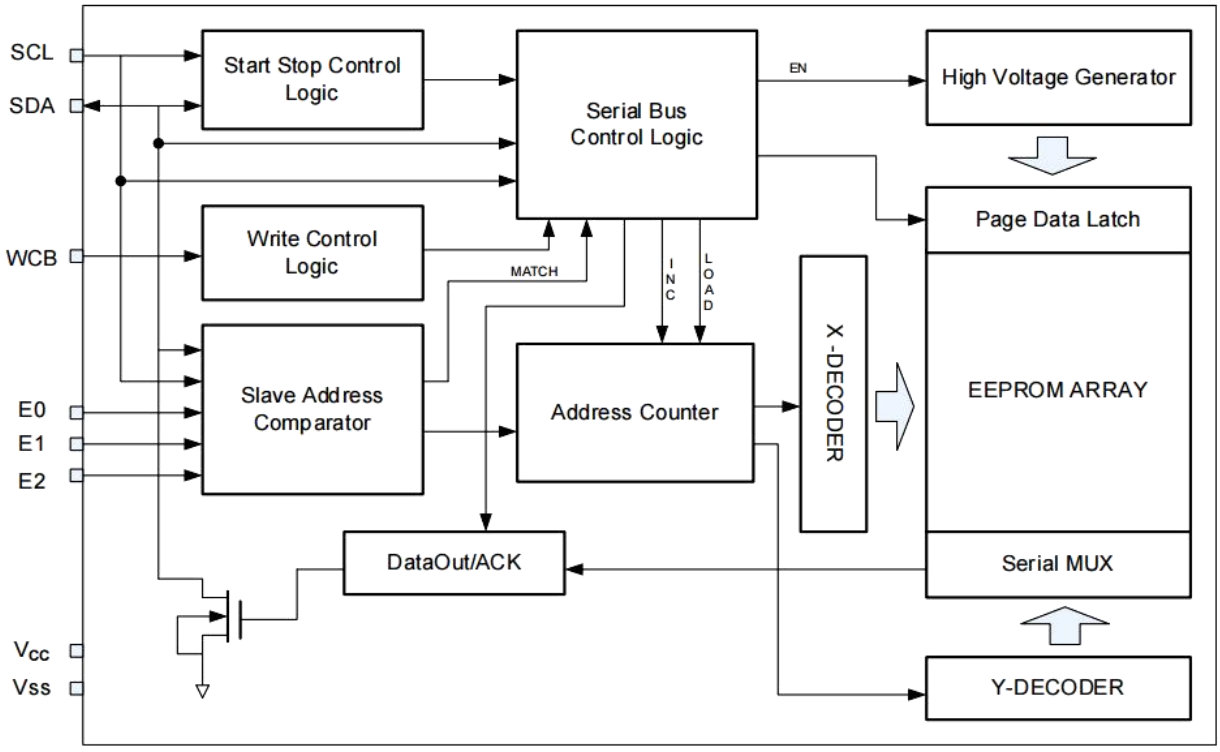

3. Electrical Characteristics

Table 3-1 Absolute Maximum Ratings [1]

Symbol	Parameter	Min.	Max.	Units
T_{STG}	Storage Temperature	-65	150	°C
T_A	Ambient operating temperature range [2]	-40	125	°C
V_{CC}	Supply Voltage	-0.5	6.5	V
V_{IO}	Input or output range	-0.45	6.5	V
I_{OL}	DC output current (SDA=0)	-	5	mA
T_L	Lead Temperature (Soldering, 10 seconds)	-	260	°C

Note: [1] Stresses above those listed under “Absolute Maximum Ratings” may cause permanent damage to the device. This is a stress rating only and functional operation of the device at those or any other conditions above those indicated in the operational listings of this specification is not implied. Exposure to maximum rating conditions for extended periods may affect device reliability.

[2] Operating temperature range: -40°C to +125°C. This product is designed for industrial grade applications. For automotive grade versions compliant with AEC-Q100, please conduct internal screening per the standard or contact our sales team for availability.

Table 3-2 Pin Capacitance [1]

Symbol	Parameter	Min.	Max.	Units	Test Condition
$C_{I/O}$	Input/output Capacitance (SDA)		8	pF	$V_{I/O}$ = Vss
C_{IN}	Input Capacitance (SCL)		6	pF	V_{IN} = Vss
Z_L[3]	Input Impedance(E2, E1, E0, WCB)	3.5		kΩ	$V_{IN} < 0.3V_{CC}$
Z_H[3]	Input Impedance(E2, E1, E0, WCB)	20		MΩ	$V_{IN} > 0.7V_{CC}$

Note: [1] Test Conditions: T_A= 25°C, f_{SCL} = 1MHz, Vcc =3.3V.

[2] Characterized values, not tested 100% in production

[3] E2,E1,E0,WCB: Input impedance when the memory is selected (after a Start condition).

[4] Recommended external pull-up resistors less than 1.3kΩ

Table 3-3 DC Characteristics

(Unless otherwise specified, V_{CC} = 1.7 V to 5.5 V, T_A= -40°C to +125°C)

Symbol	Parameter	Min.	Typ.	Max.	Unit	Test Condition
V_{CC}	Supply Voltage	1.7	-	5.5	V	T_A = -40 °C to 125 °C
Isb	Standby Current (Standby mode)	-	0.5[2]	8.0	uA	V_{CC} =5.5 V,Vin = Vss or V_{CC},Ta=85℃
		-	10.0	20.0	uA	V_{CC} =5.5 V,Vin = Vss or V_{CC},Ta=125℃
I_{CC1}	Supply Current (Read)	-	0.4	1.5	mA	V_{CC} = 2.5 V, f_{SCL} = 400 kHz
		-	0.5	2.0	mA	V_{CC} = 5.5 V, f_{SCL} = 400 kHz
		-	0.6	2.5	mA	V_{CC} = 5.5 V, f_{SCL} = 1 MHz
		-	0.8	3.0	mA	V_{CC} = 5.5 V, f_{SCL} = 3.4 MHz
I_{CC2} [1]	Supply Current (Write)	-	2.5[3]	6.0	mA	During tWR, 1.7V < V_{CC} < 5.5 V
I_{LI}	Input Leakage Current	-2.0	-	+2.0	μA	V_{IN} = V_{CC} or Vss, device in standby mode
I_{LO}	Output Leakage Current	-2.0	-	+2.0	μA	SDA in Hi-Z, external voltage applied
						on SDA: Vss or Vcc
V_{IL}	Input Low Voltage	-0.45	-	0.3Vcc	V	SCL, SDA
V_{IH}	Input High Voltage	0.7Vcc	-	V_{CC}+0.5	V	SCL, SDA
V_{OL}	Output Low Voltage	-	-	0.4	V	I_{OL} = 2.1 mA, V_{CC} = 2.5 V

Note: [1] Characterized values, not tested in production

[2] Typ. ISB @ VCC =5.5V, T_A =25℃

[3] Typ. I_{CC2} @ VCC =2.5V

Table 3-4 Fast Mode AC Characteristics

(TA = -40 °C to +125 °C)

Symbol	Parameter	1.7 ≤ V_{CC} ≤ 5.5			1.7 ≤ V_{CC} ≤ 5.5			Unit s
		Min.	Typ.	Max.	Min.	Typ.	Max.	
f_{SCL}	Clock Frequency	-	-	400	-	-	1000	kHz
t_{LOW}	Clock Pulse Width Low	1.3	-	-	0.55	-	-	μs
t_{HIGH}	Clock Pulse Width High	0.6	-	-	0.3	-	-	μs
t_{AA}	Clock Low to Data Out Valid	0.05	-	0.9	0.05	-	0.50	μs
t_I	Noise Suppression Time	-	-	0.05	-	-	0.05	μs
t_{BUF}	Time the bus must be free before a new transmission can start	1.3	-	-	0.5	-	-	μs
$t_{HD.STA}$	Start Hold Time	0.6	-	-	0.25	-	-	μs
$t_{SU.STA}$	Start Setup Time	0.6	-	-	0.25	-	-	μs
$t_{HD.DAT}$	Data in Hold Time	0	-	-	0	-	-	μs
$t_{SU.DAT}$	Data in Setup Time	0.1	-	-	0.08	-	-	μs
t_R	Inputs Rise Time[1]	-	-	0.3	-	-	0.3	μs
t_F	Inputs Fall Time[1]	-	-	0.3	-	-	0.12	μs
$t_{SU.STO}$	Stop Setup Time	0.6	-	-	0.25	-	-	μs
t_{DH}	Data Out Hold Time	0.05	-	-	0.05	-	-	μs
$t_{SU.WCB}$	WCB pin Setup Time	1.0	-	-	0.6	-	-	μs
$t_{HD.WCB}$	WCB pin Hold Time	1.0	-	-	0.6	-	-	μs
t_{WR}	Write Cycle Time	-	-	5	-	-	5	ms

Notes: [1] This parameter is ensured by characterization not 100% tested

[2] AC measurement conditions:

- tAA is the time (from the falling edge of SCL) required by the SDA bus line to reach either 0.3 VCC or 0.7 VCC, assuming that Rbus × Cbus time constant is within 400 ns for 0.4 MHz frequency, within 120 ns for 1 MHz frequency
- RL (connect to VCC): 1.3 kΩ
- CL = 100 pF
- Input pulse voltage: 0.2 VCC to 0.8 VCC
- Input rise and fall time: < 50 ns
- Input and output timing reference voltage: 0.3 VCC and 0.7 VCC

Table 3-5 High Speed Mode AC Characteristics

(T_A= -40 °C to +125 °C)

Symbol	Parameter	1.7 ≤ V_{CC} ≤ 5.5			Units
		Min.	Typ.	Max.	
f_{SCL}	Clock Frequency	-	-	3400	kHz
t_{LOW}	Clock Pulse Width Low	0.16	-	-	μs
t_{HIGH}	Clock Pulse Width High	0.11	-	-	μs
t_{AA}	Clock Low to Data Out Valid	0.01	-	0.14	μs
t_I	Noise Suppression Time	-	-	0.01	μs
t_{BUF}	Time the bus must be free before a new transmission can start	0.3	-	-	μs
$t_{HD.STA}$	Start Hold Time	0.16	-	-	μs
$t_{SU.STA}$	Start Setup Time	0.16	-	-	μs
$t_{HD.DAT}$	Data in Hold Time	0	-	-	μs
$t_{SU.DAT}$	Data in Setup Time	0.01	-	-	μs
t_R	Inputs Rise Time[1]	0.01	-	0.08	μs
t_F	Inputs Fall Time[1]	0.01	-	0.08	μs
$t_{SU.STO}$	Stop Setup Time	0.16	-	-	μs
t_{DH}	Data Out Hold Time	0.05	-	-	μs
$t_{SU.WCB}$	WCB pin Setup Time	0.6	-	-	μs
$t_{HD.WCB}$	WCB pin Hold Time	0.6	-	-	μs
t_{WR}	Write Cycle Time	-	-	5	ms

Notes: [3] AC measurement conditions:

- t_{AA} is the time (from the falling edge of SCL) required by the SDA bus line to reach either 0.3 VCC or 0.7 VCC, assuming that Rbus × Cbus time constant is within 20 ns
- RL (connect to VCC): 1.3 kΩ
- CL = 15 pF
- Input pulse voltage: 0.2 VCC to 0.8 VCC
- Input rise and fall time: < 50 ns
- Input and output timing reference voltage: 0.3 VCC and 0.7 VCC

Table 3-6 Reliability Characteristic [1]

Symbol	Parameter	Test condition	Min.	Unit
EDR[2]	Endurance	TA ≤ 25 °C, VCC(min) < VCC < VCC(max)	10,000,000	Write cycles
		TA = 85°C, VCC(min) < VCC < VCC(max)	4,000,000	
		TA = 125°C, VCC(min) < VCC < VCC(max)	1,000,000	
DRET	Data retention	TA = 55 °C	200	Years
		TA = 85 °C	50	
		TA = 125 °C	20	

Note: [1] The Write cycle endurance is defined for groups of four data bytes located at addresses [4*N, 4*N+1, 4*N+2, 4*N+3] where N is an integer, or for the status register byte. This parameter is ensured by characterization and is not 100% tested

[2] Under the condition: 3.3V, Page mode

Figure 3-1 Bus Timing

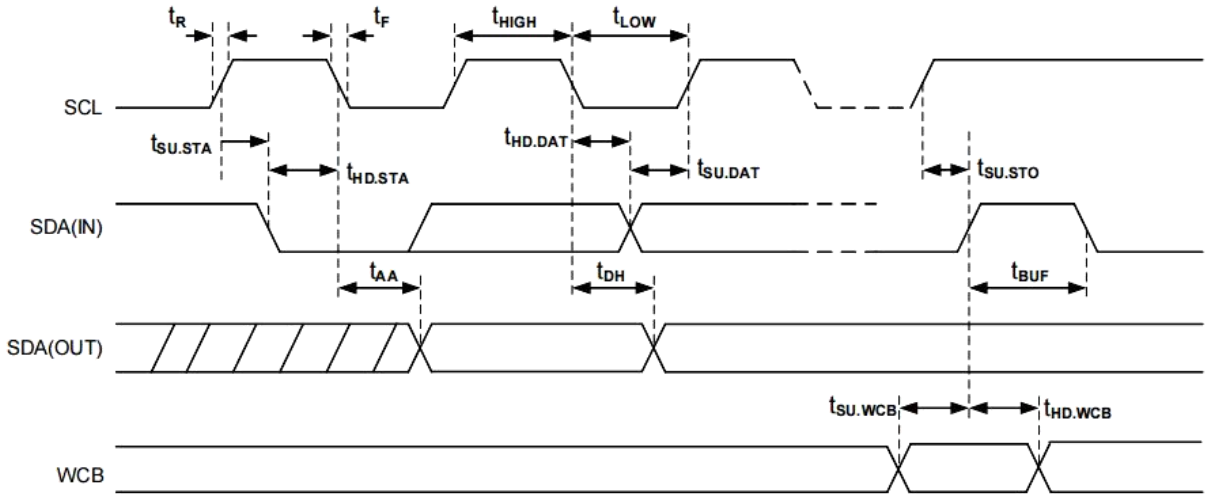

Figure 3-2 Write Cycle Timing

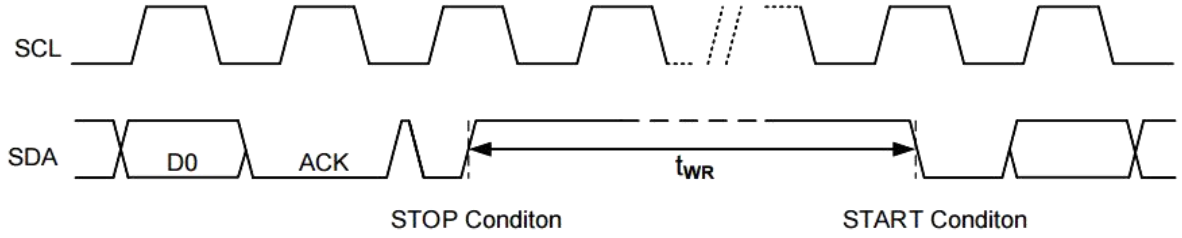

Note: [1] The write cycle time tWR is the time from a valid stop condition of a write sequence to the end of the internal write cycle.

Device Power-Up

The EEPROM has a built-in power-on-reset circuit that initializes itself at the same time during power-on. Unsuccessful initialization may cause a malfunction. To operate the power-on-reset circuit normally, the following conditions must be satisfied to raise the power supply voltage.

When initialization is successfully completed by the power-on-reset circuit, the EEPROM enters the standby status. tVSL is the time required to initialize the EEPROM. No instructions are accepted during this time.

Figure 3-3 Power up Timing

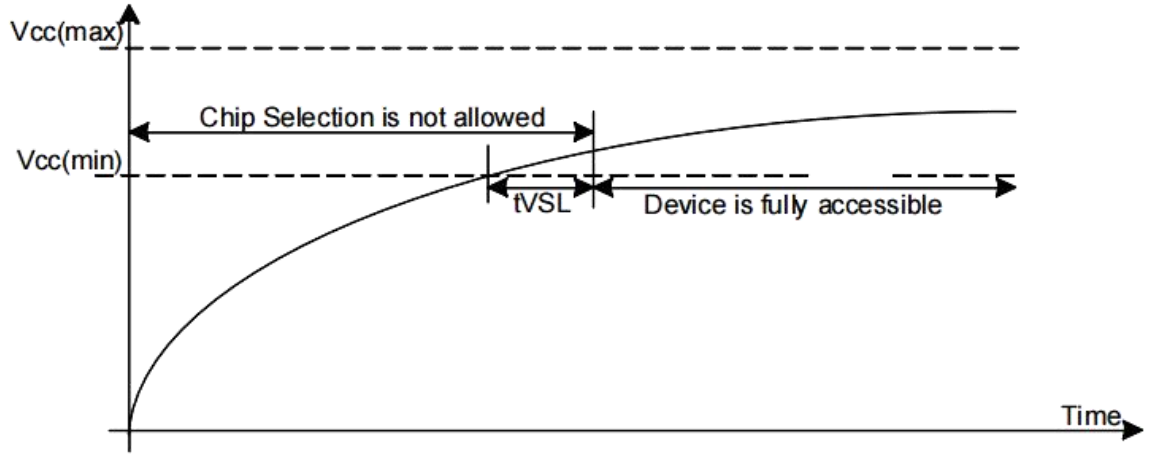

Power Up/Down and Voltage Drop

For Power-down to Power-up operation, the VCC of EEPROM device must below VPWD for at least tPWD timing. Please check the table below for more detail.

Figure 3-4 Power down-up Timing

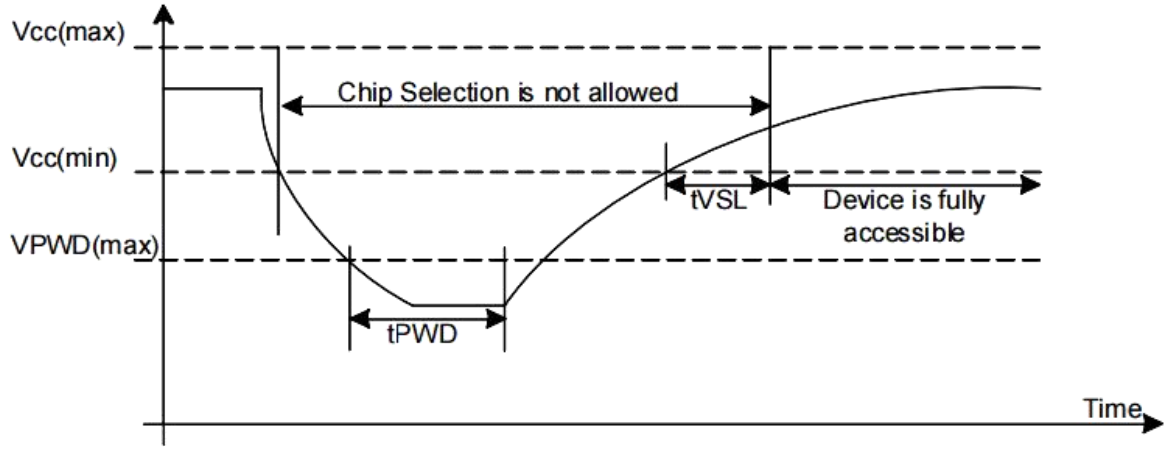

Symbol	Parameter	min	max	unit
VPWD	VCC voltage needed to below VPWD for ensuring initialization will occur		0.7	V
tPWD	The minimum duration for ensuring initialization will occur	300		us
tVSL	VCC(min.) to device operation	100		us
tVR	VCC Rise Time	1	500000	us/V

4. Device Operation

4.1 Data Input

The SDA pin is normally pulled high with an external device. Data on the SDA pin may change only during SCL low time periods (see to Figure 4-1). Data changes during SCL high periods will indicate a start or stop condition as defined in Figure 4-2.

Figure 4-1 Data Validity

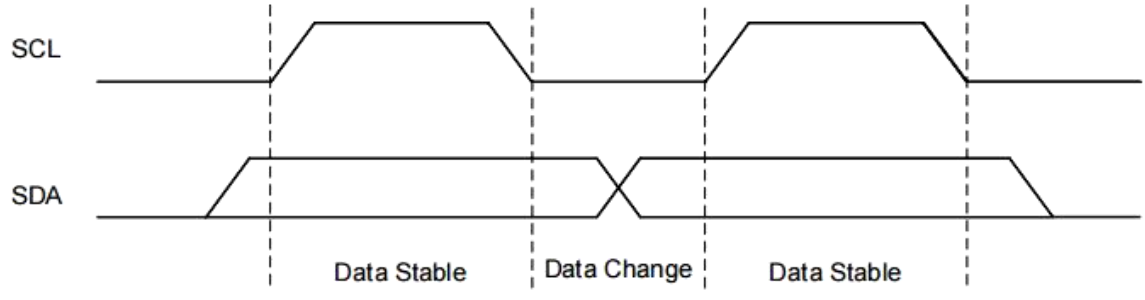

4.2 Start Condition

A high-to-low transition of SDA with SCL high is a start condition which must precede any other command (see to Figure 4-2).

4.3 Stop Condition

A low-to-high transition of SDA with SCL high is a stop condition. After a read sequence, the stop command will place the AT24C512 in a standby mode (see Figure 4-2).

Figure 4-2 Start and Stop Definition

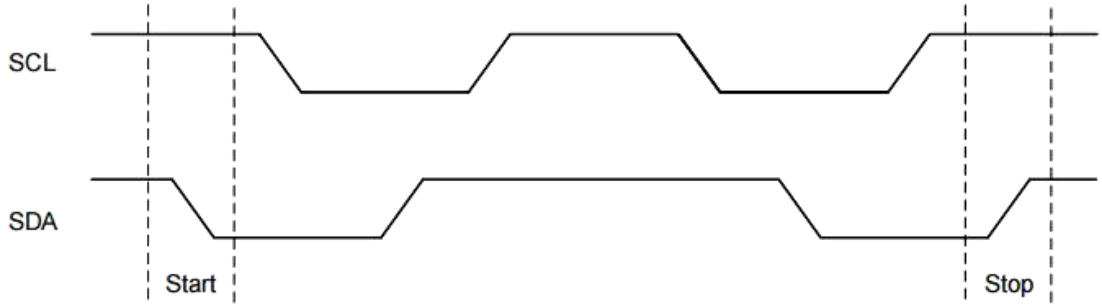

4.4 Acknowledge (ACK)

All addresses and data words are serially transmitted to and from the AT24C512 in 8-bit words. The AT24C512 sends a “0” to acknowledge that it has received each word. This happens during the ninth clock cycle.

Figure 4-3 Output Acknowledge

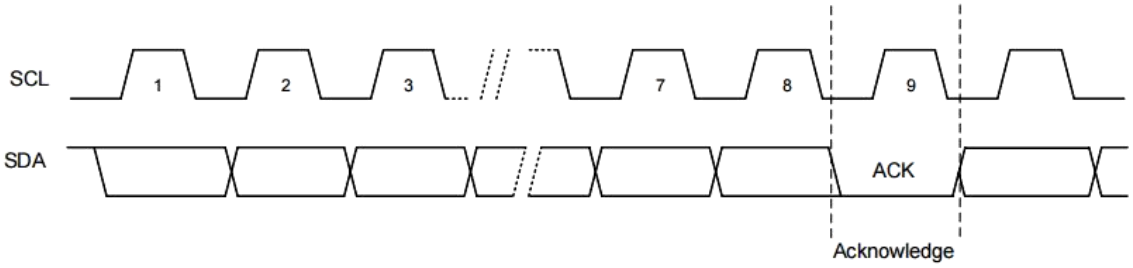

4.5 Power Up Sequence

During a power-up sequence, the V_{CC} supplied to AT24C512 should monotonically rise from Vss to the minimum V_{CC} level as specified in Section 3, “Electrical Characteristics” with a slew rate no greater than1V/us.

To prevent inadvertent write operations or other spurious events from happening during a power-up sequence, the AT24C512 includes a power-on-reset circuit. Upon power-up, the device will not respond to any commands until the V_{CC} level crosses the internal voltage threshold and waiting 100μs that brings the device out of reset and into standby mode.

4.6 Standby Mode

The AT24C512 features a low-power standby mode which is enabled: (a) after a fresh power up, (b) after receiving a STOP bit in read mode, and (c) after completing a self-time internal programming operation.

4.7 Soft Reset

After an interruption in protocol, power loss or system reset, any two-wire part can be reset by following these steps: (a) Create a start condition, (b) Clock nine cycles, and (c) create another start bit followed by stop bit condition, as shown below. The device is ready for the next communication after the above steps have been completed.

Figure 4-4 Soft Reset

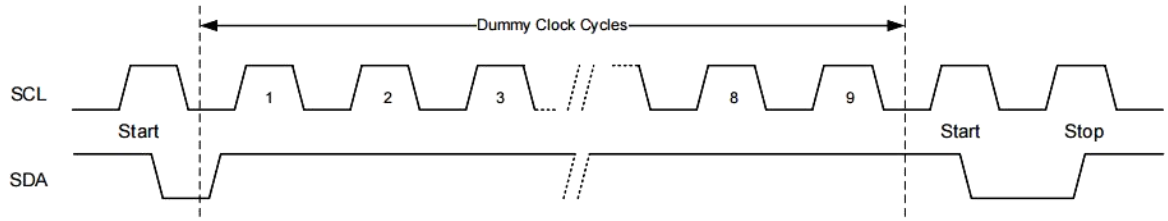

4.8 Device Addressing

The AT24C512 requires an 8-bit device address word following a start condition to enable the chip for a read or write operation (see Figure 4-5). The device address word consists of a mandatory one-zero sequence for the first four most-significant bits, as shown.

Figure 4-5 Device Address

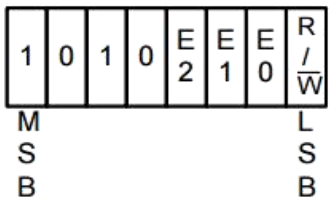

The three E2, E1, and E0 device address bits allow as many as eight devices on the same bus. These bits must compare to their corresponding hardwired input pins.

The E2, E1, and E0 pins use an internal proprietary circuit that biases them to a logic low condition if the pins are floating.

The eighth bit of the device address is the read/write operation select bit. A read operation is initiated if this bit is high and a write operation is initiated if this bit is low. Upon a compare of the device address, the Chip will output a zero. If a compare is not made, the device will return to a standby state.

Table 4-1 Device Address

Chip	Access area	Bit 7	Bit 6	Bit 5	Bit 4	Bit 3	Bit 2	Bit 1	Bit 0
AT24C512	Normal Area	1	0	1	0	E2	E1	E0	R/W
	ID Page	1	0	1	1	E2	E1	E0	R/W
	Lock Bit	1	0	1	1	E2	E1	E0	R/W
	Serial Number	1	0	1	1	E2	E1	E0	1

Table 4-2 Word Address0

Chip	Data	Bit 7	Bit 6	Bit 5	Bit 4	Bit 3	Bit 2	Bit 1	Bit 0
AT24C512	Normal Area	A15	A14	A13	A12	A11	A10	A9	A8
	ID Page	X	X	X	X	0	0	X	X
	Lock Bit	X	X	X	X	X	1	X	X
	Serial Number	X	X	X	X	1	0	X	X

Table 4-3 Word Address1

Chip	Data	Bit 7	Bit 6	Bit 5	Bit 4	Bit 3	Bit 2	Bit 1	Bit 0
AT24C512	Normal Area	A7	A6	A5	A4	A3	A2	A1	A0
	ID Page	X	A6	A5	A4	A3	A2	A1	A0
	Lock Bit	X	X	X	X	X	X	X	X
	Serial Number	X	X	X	X	A3	A2	A1	A0

4.9 Data Security

AT24C512 has a hardware data protection scheme that allows the user to write protect the whole memory when the WCB pin is at Vcc.

4.10 ECC (Error Correction Code) and Write cycling

The Error Correction Code (ECC) is an internal logic function which is transparent for the I^2C communication protocol.

The ECC logic is implemented on each group of four EEPROM bytesgroup [1]. Inside a group, if a single bit out of the four bytes happens to be erroneous during a Read operation, the ECC detects this bit and replaces it with the correct value. The read reliability is therefore much improved.

Even if the ECC function is performed on groups of four bytes, a single byte can be written/cycled independently. In this case, the ECC function also writes/cycles the three other bytes located in the same group [1]. As a consequence, the maximum cycling budget is defined at group level and the cycling can be distributed over the 4 bytes of the group: the sum of the cycles seen by byte0, byte1, byte2 and byte3 of the same group must remain below the maximum value.

Note: [1] A group of four bytes is located at addresses [4*N, 4*N+1, 4*N+2, 4*N+3], where N is an integer

4.11 High Speed Mode (HS-mode)

The AT24C512 supports 3.4 MHz high speed mode. A master code (00001XXXb) must be issued to place the device into high speed mode. Communication between master and slave will then be enabled for speeds up to 3.4 MHz. A STOP condition will exit Hs-mode. Single- and multiple-byte reads and writes are supported.

Figure 4-6 High Speed Mode Communication

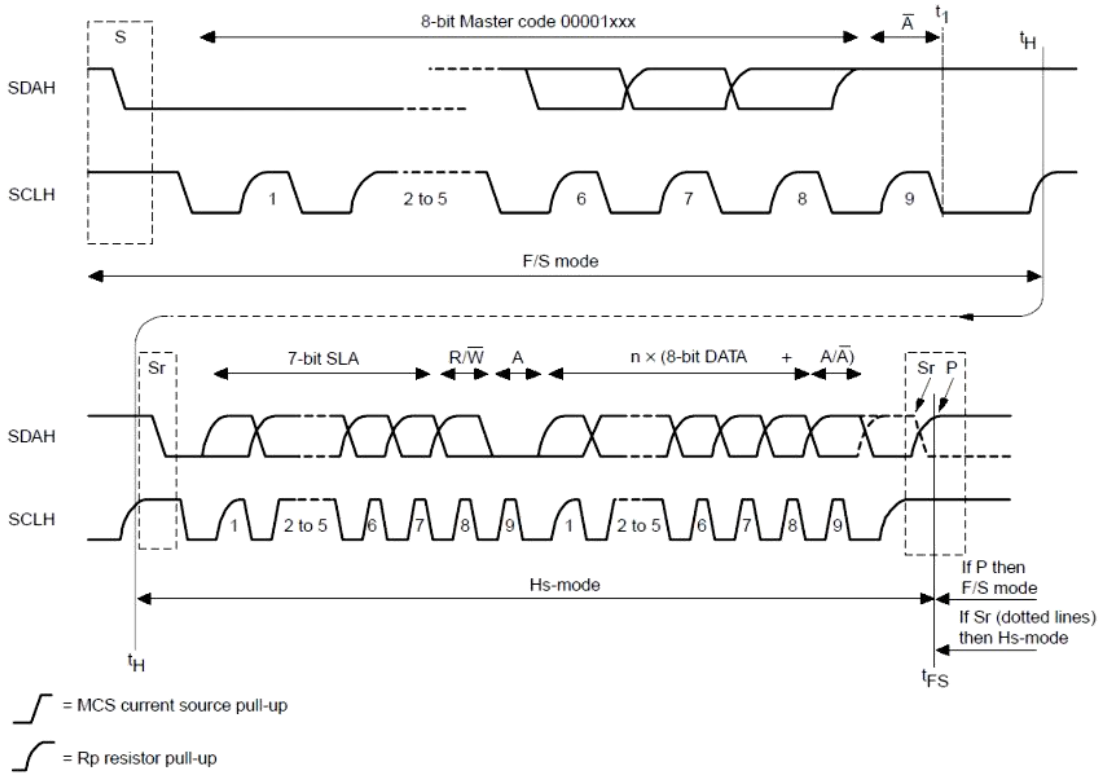

Sr: Repeated Start Flag

5. Instructions

5.1 Write Operations

5.1.1 Byte Write

A write operation requires two 8-bit data word address (A15~A0) following the device address word and acknowledgment. Upon receipt of this address, the AT24C512 will again respond with a “0” and then clock in the first 8-bit data word. Following receipt of the 8-bit data word, the AT24C512 will output a “0” and the addressing device, such as a microcontroller, must terminate the write sequence with a stop condition. And then the AT24C512 enters an internally timed write cycle, all inputs are disabled during this write cycle and the AT24C512 will not respond until the write is complete (see Figure 5-1).

Figure 5-1 Byte Write

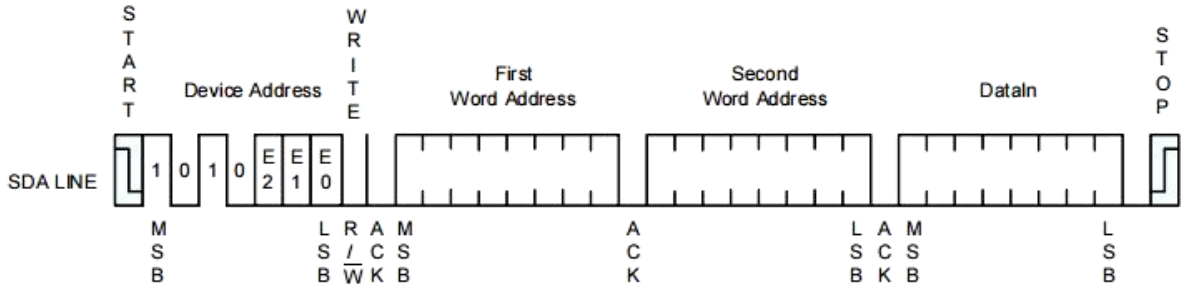

5.1.2 Page Write

A page write is initiated the same as a byte write, but the master does not send a stop condition after the first data word is clocked in. Instead, after the AT24C512 acknowledges receipt of the first data word, the master can transmit more data words. The AT24C512 will respond with a “0” after each data word received. The microcontroller must terminate the page write sequence with a stop condition.

Figure 5-2 Page Write

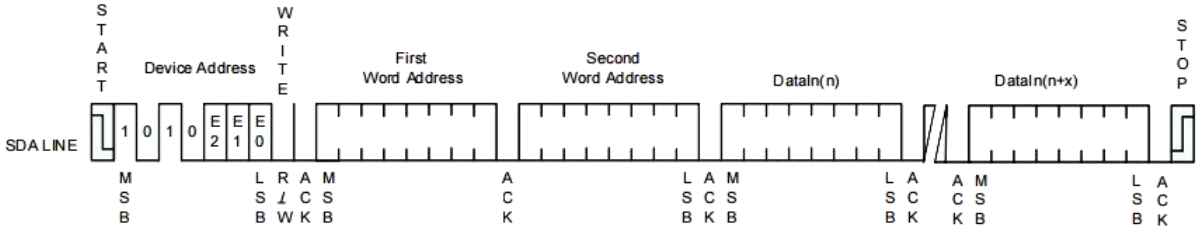

The lower seven bits of the data word address are internally incremented following the receipt of each data word. The higher data word address bits are not incremented, retaining the memory page row location. When the word address, internally generated, reaches the page boundary, the following byte is placed at the beginning of the same page. If more than 128 data words are transmitted to the AT24C512, the data word address will roll-over, and previous data will be overwritten. The address roll-over during write is from the last byte of the current page to the first byte of the same page.

5.1.3 Acknowledge Polling

Once the internally timed write cycle has started and the AT24C512 inputs are disabled, acknowledge polling can be initiated. This involves sending a start condition followed by the device address word. The read/write bit is representative of the operation desired. Only if the internal write cycle has completed will the AT24C512 respond with a “0”, allowing the read or write sequence to continue.

5.1.4 Write Identification Page

The Identification Page (128 bytes) is an additional page which can be written and later permanently locked in Read-only mode. It is written by the Write Identification Page instruction. This instruction uses the same protocol and format as Page Write, except for the following differences:

- Device type identifier = 1011b
- MSB address A11 and A10 must be “0” while other bits in A15~A7 are don’t care.
- LSB address bits A6~A0 define the byte address inside the Identification page.

If the Identification page is locked, the data bytes transferred during the Write Identification Page instruction are not acknowledged (NoACK).

5.1.5 Lock Identification Page

The Lock Identification Page instruction (Lock Bit Write Instruction) permanently locks the Identification page in Read-only mode. The Lock ID Page instruction is similar to Byte Write with the following specific conditions:

- Device type identifier = 1011b
- Address bit A10 must be ‘1’; all other address bits are don’t care
- The data byte must be equal to the binary value xxxx xx1x, where x is don’t care

5.2 Read Operations

Read operations are initiated the same way as write operations with the exception that the read/write select bit in the device address word is set to “1”. There are three read operations: Current Address Read; Random Address Read and Sequential Read.

5.2.1 Current Address Read

The internal data word address counter maintains the last address accessed during the last read or write operation, incremented by one. This address stays valid between operations as long as the chip power is maintained. The address roll-over during read is from the last byte of the last memory page to the first byte of the first page.

Once the device address with the read/write select bit set to “1” is clocked in and acknowledged by the AT24C512, the current address data word is serially clocked out. The microcontroller does not respond with an input “0” but does generate a following stop condition (see Figure 5-3).

Figure 5-3 Current Address Read

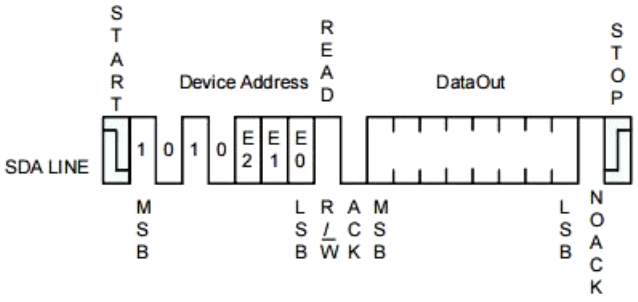

5.2.2 Random Read

A Random Read requires a “dummy” byte write sequence to load in the data word address. Once the device address word and data word address are clocked in and acknowledged by the AT24C512, the microcontroller must generate another start condition. The microcontroller now initiates a Current Address Read by sending a device address with the read/write select bit high. The AT24C512 acknowledges the device address and serially clocks out the data word. The microcontroller responds with a “1” and generates stop condition (see Figure 5-4) followed.

Figure 5-4 Random Read

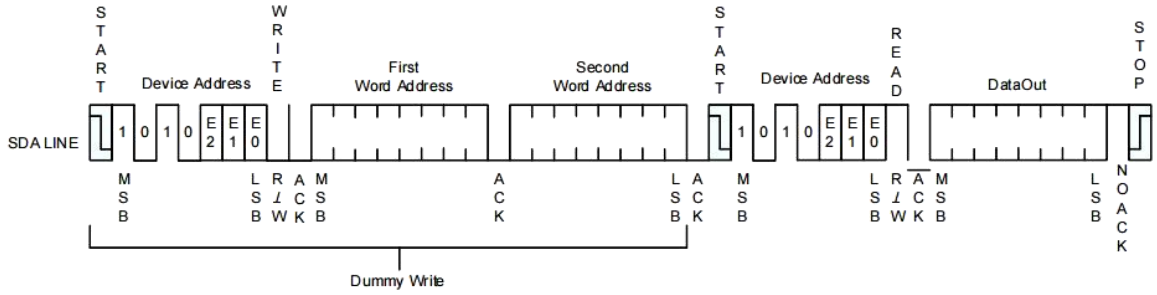

5.2.3 Sequential Read

Sequential Reads are initiated by either a Current Address Read or a Random Address Read. After the microcontroller receives a data word, it responds with acknowledge. As long as the AT24C512 receives acknowledge, it will continue to increment the data word address and serially clock out sequential data words. When the memory address limit is reached, the data word address will roll-over and the Sequential Read will continue. The Sequential Read operation is terminated when the microcontroller responds with a “1” and generates a stop condition (see Figure 5-5) followed.

Figure 5-5 Sequential Read

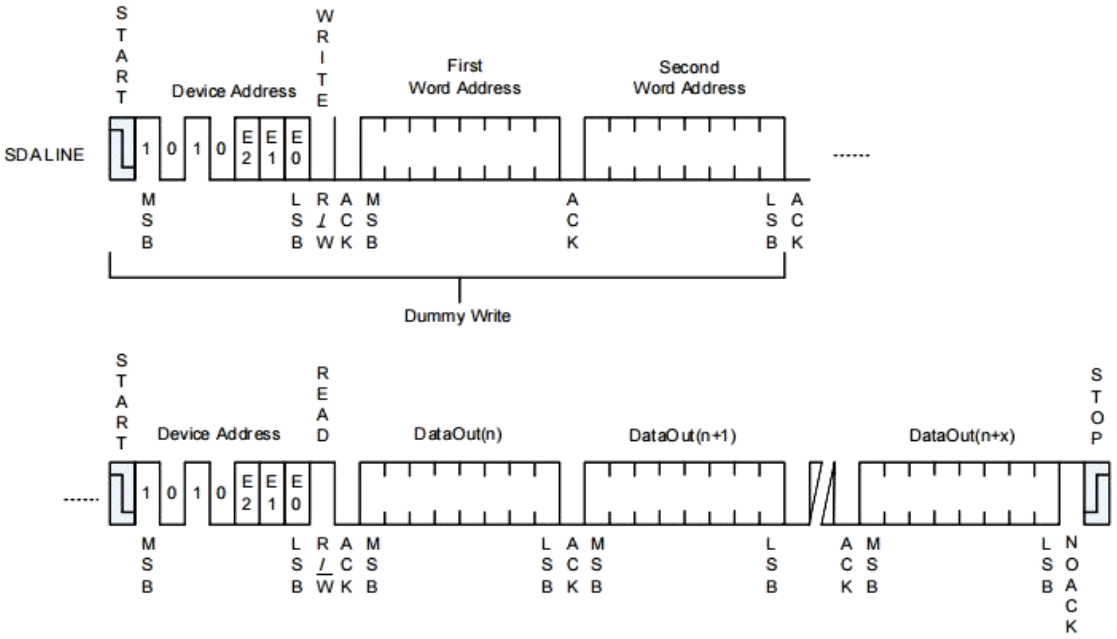

5.2.4 Read Identification Page

The Identification Page (128 bytes) is an additional page which can be written and later permanently locked in Read-only mode. The Identification Page can be read by Read Identification Page instruction which uses the same protocol and format as the Read Command with device type identifier defined as 1011b. The MSB address bits A15~A7 are don’t care (except A11 and A10 must be “0”), the LSB address bits A6~A0 define the byte address inside the Identification Page. The number of bytes to read in the ID page must not exceed the page boundary (e.g. When reading the Identification Page from location 10d, the number of bytes should be less than or equal to 118, as the ID page boundary is 128 bytes).

5.2.5 Read Lock Status

The locked/unlocked status of the Identification page can be checked by transmitting a specific truncated command [Identification Page Write instruction + one data byte] to the device. The device returns an acknowledge bit if the Identification page is unlocked, otherwise a NO-ACK bit if the Identification page is locked.

Figure 5-6 Lock Status Read (When Identification page locked, return NO-ACK after one data byte)

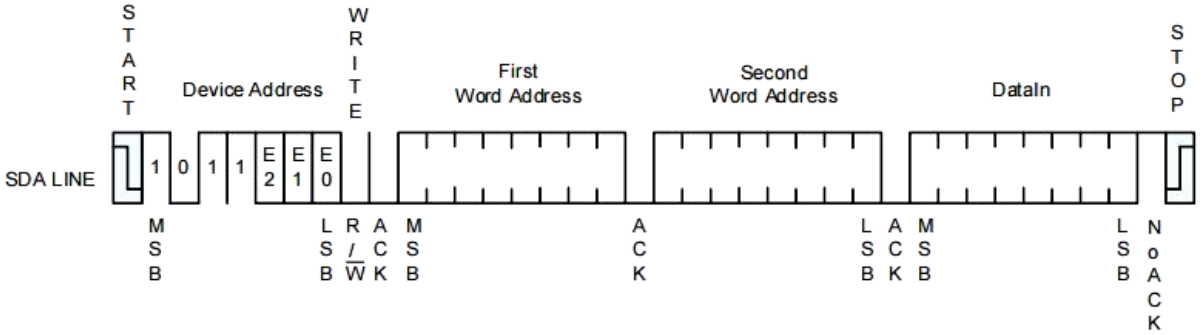

5.2.6 Read Serial Number

The Serial Number is only 16 bytes and is Read-only.

Reading the serial number is similar to the sequential read sequence but requires use of the device address seen in Table 4-1, and the use of a specific word address. The entire 128-bit value must be read from the starting address of the serial number block to guarantee a unique number.

Since the address pointer of the device is shared between the regular EEPROM array and the serial number block, a dummy write sequence, as part of a Random Read or Sequential Read protocol, should be performed to ensure the address pointer is set to zero. Reading the serial number from a location other than the first address of the block will not result in a unique serial number.

Additionally, the word address contains a '10' sequence in bit A11 and A10 of the word address, regardless of the intended address as depicted in Table 4-2. If a word address other than '10' is used, then the device will output unintended data.

When the end of the 128 bits serial number is reached (16 bytes of data), continued reading of the extended memory region will result in an additional 16 bytes of 00h data. Upon reaching the end of the 16 bytes extended memory region, the data word address will roll-over back to the beginning of the 128 bits serial number. The Serial Number Read operation is terminated when the master does not respond with a zero (ACK) and instead issues a STOP bit (Refer to Figure 5-7).

Figure 5-7 Serial Number Read

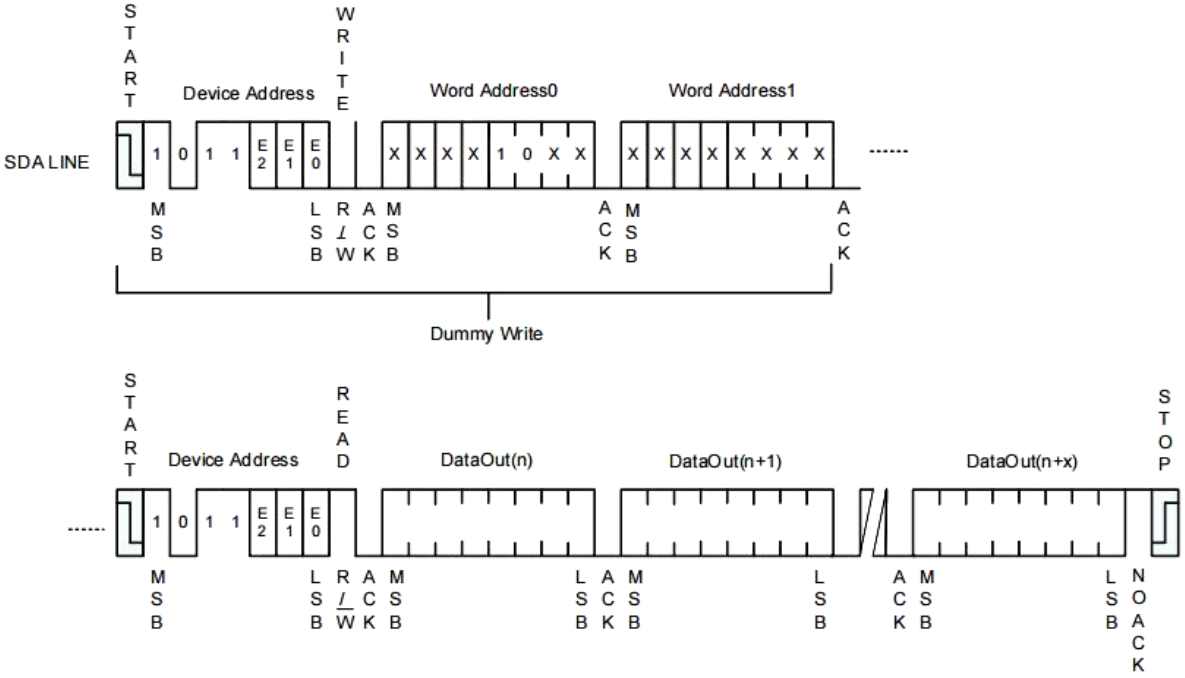

Physical Dimensions

DIP-8

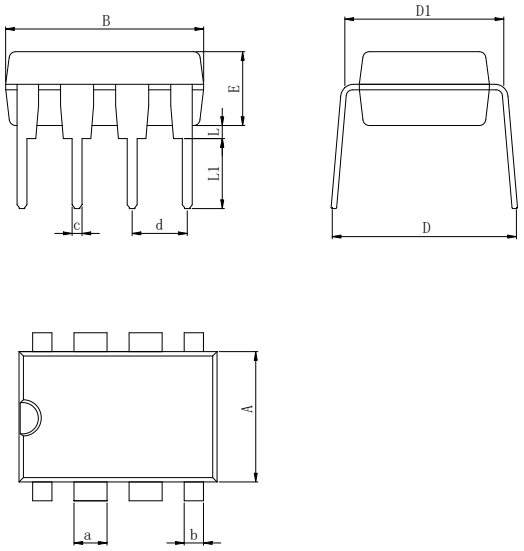

Dimensions In Millimeters(DIP-8)											
Symbol:	**A**	**B**	**D**	**D1**	**E**	**L**	**L1**	**a**	**b**	**c**	**d**
Min:	6.10	9.00	8.10	7.42	3.10	0.50	3.00	1.50	0.85	0.40	2.54 BSC
Max:	6.68	9.50	10.9	7.82	3.55	0.70	3.60	1.55	0.90	0.50	

SOP-8

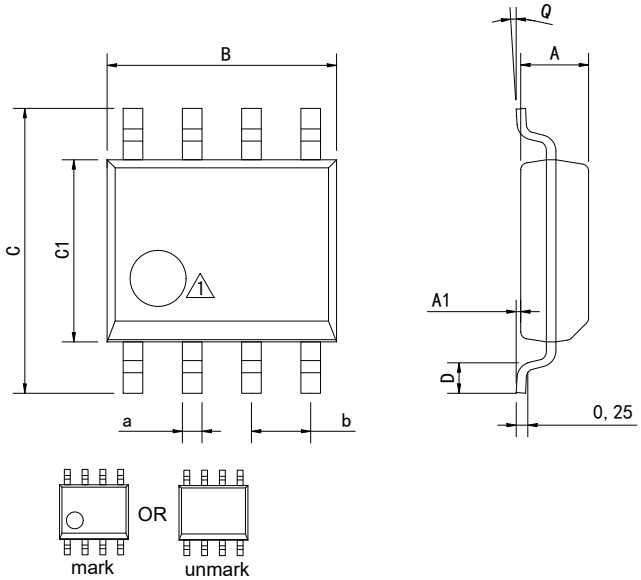

1 Package top mark may be in lower left corner or unmark

Dimensions In Millimeters(SOP-8)									
Symbol:	A	A1	B	C	C1	D	Q	a	b
Min:	1.35	0.05	4.90	5.80	3.80	0.40	0°	0.35	1.27 BSC
Max:	1.55	0.20	5.10	6.20	4.00	0.80	8°	0.45	

Physical Dimensions

MSOP-8

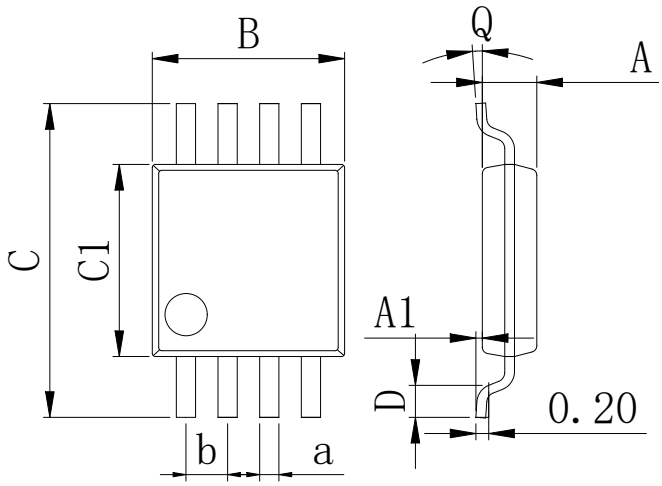

Dimensions In Millimeters(MSOP-8)									
Symbol:	**A**	**A1**	**B**	**C**	**C1**	**D**	**Q**	**a**	**b**
Min:	0.80	0.05	2.90	4.75	2.90	0.35	0°	0.25	0.65 BSC
Max:	0.90	0.20	3.10	5.05	3.10	0.75	8°	0.35	

TSSOP-8 (4.4*3.0)

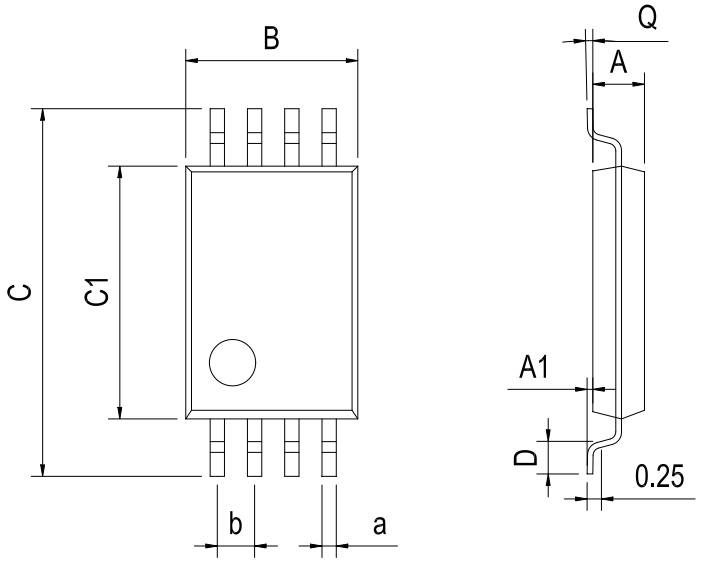

Dimensions In Millimeters(TSSOP-8)									
Symbol:	**A**	**A1**	**B**	**C**	**C1**	**D**	**Q**	**a**	**b**
Min:	0.85	0.05	2.90	6.20	4.30	0.40	0°	0.20	0.65 BSC
Max:	0.95	0.20	3.10	6.60	4.50	0.80	8°	0.25	

Physical Dimensions

DFN-8 3*3

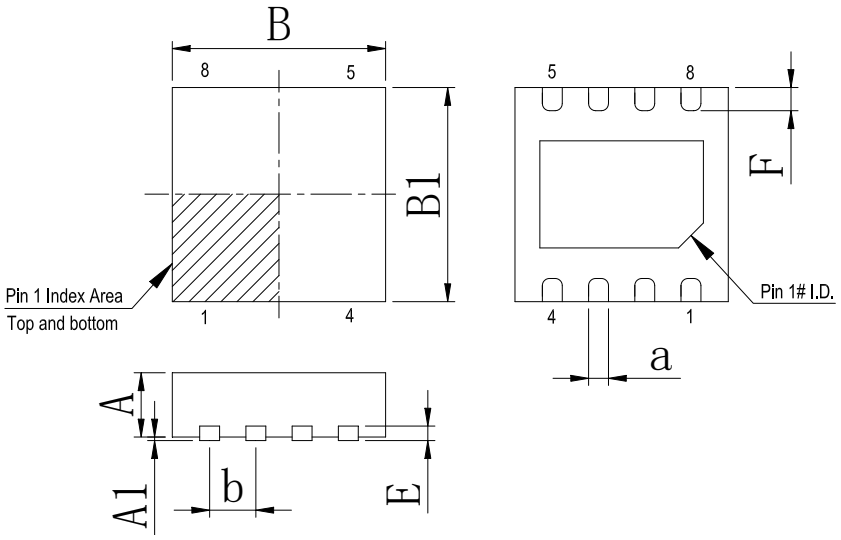

Dimensions In Millimeters(DFN-8 3*3)								
Symbol:	**A**	**A1**	**B**	**B1**	**E**	**F**	**a**	**b**
Min:	0.85	0.00	2.90	2.90	0.20	0.30	0.20	0.65 BSC
Max:	0.95	0.05	3.10	3.10	0.25	0.50	0.34	

SOT-23-5

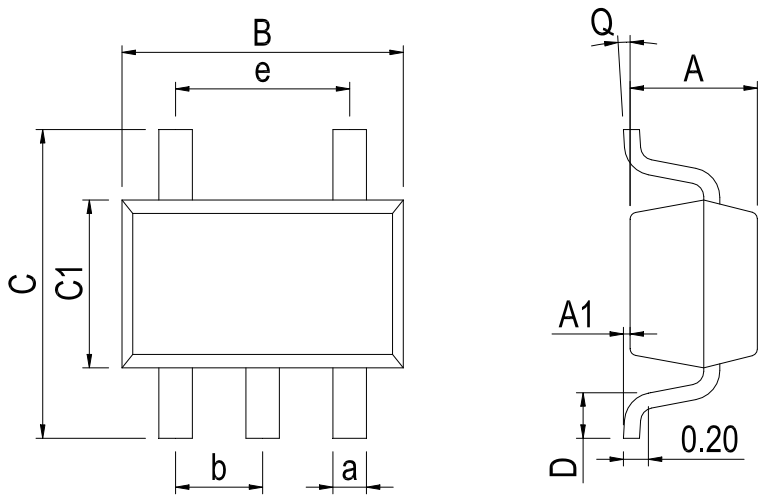

Dimensions In Millimeters(SOT-23-5)										
Symbol:	**A**	**A1**	**B**	**C**	**C1**	**D**	**Q**	**a**	**b**	**e**
Min:	1.00	0.00	2.82	2.65	1.50	0.30	0°	0.30	0.95 BSC	1.90 BSC
Max:	1.15	0.15	3.02	2.95	1.70	0.60	8°	0.50		

Revision History

REVISION NUMBER	DATE	REVISION	PAGE
V1.0	2017-7	New	1-22
V1.1	2025-11	Document Reformatting	1-22

IMPORTANT STATEMENT:

Huaguan Semiconductor reserves the right to change products and services offered without prior notice. Customers should obtain the latest relevant information before placing orders and verify that such information is current and complete. Huaguan Semiconductor assumes no responsibility or liability for altered documents.

Customers are responsible for complying with safety standards and implementing safety measures when using Huaguan Semiconductor products in system design and end-product manufacturing. You assume full responsibility for: selecting the appropriate Huaguan Semiconductor products for your application; designing, validating, and testing your application; and ensuring that your application complies with applicable standards and all other safety, security, or other requirements. This is to prevent potential risks that may lead to personal injury or property damage.

Huaguan Semiconductor products are not approved for use in life support, military, aerospace, or other high-risk applications. Huaguan products are neither intended nor warranted for use in such systems or equipment. Any failure or malfunction may lead to personal injury or severe property damage. Such applications are deemed "Unsafe Use." Unsafe Use includes, but is not limited to: surgical and medical equipment, nuclear energy control equipment, aircraft or spacecraft instruments, control or operation of vehicle power, braking, or safety systems, traffic signal instruments, all types of safety devices, and any other applications intended to support or sustain life. Huaguan Semiconductor shall not be liable for consequences resulting from Unsafe Use in these fields. Users must independently evaluate and assume all risks. Any issues, liabilities, or losses arising from the use of products beyond their approved applications shall be solely borne by the user. Users may not claim any compensation from Huaguan Semiconductor based on these terms. If any third party claims against Huaguan Semiconductor due to such Unsafe Use, the user shall compensate Huaguan Semiconductor for all resulting damages and liabilities.

Huaguan Semiconductor provides technical and reliability data (including datasheets), design resources (including reference designs), application or other design advice, web tools, safety information, and other resources for its semiconductor products. However, no guarantee is made that these resources are free from defects, and no express or implied warranties are provided. The use of testing and other quality control techniques is limited to Huaguan Semiconductor's quality assurance scope. Not all parameters of each device are tested.

Huaguan Semiconductor's documentation authorizes you to use these resources only for developing applications related to the products described herein. You are not granted rights to any other intellectual property of Huaguan Semiconductor or any third party. Any other reproduction or display of these resources is strictly prohibited. You shall fully indemnify Huaguan Semiconductor and its agents against any claims, damages, costs, losses, and liabilities arising from your use of these resources. Huaguan Semiconductor shall not be held responsible.