1. Serviceability:

1.1 This acknowledgement applies to our lead-free, halogen-free series thick film chip resistors.

1.2 The Company's lead-free products mean that the RoHS-compliant end electrodes are free of lead, and the lead present in the resistive layer glass material is in compliance with the lead exclusion provisions of RoHS.

1.3 This product is suitable for automotive electronics applications. It meets the requirements of AEC-Q200, Table 7 Reliability.

2. Specification Table:

2.1.

Sizes	Power	rated voltage	Max. overload voltage	T.C.R (ppm/℃)	Resistance range		Working Temperature Range
					F(±1%) B(±0.1%) D(±0.5%) E-24、E-96	J(±5%) E-24	
0402	1/8 W	50V	100V	±200	10Ω≦R＜1MΩ	---	-55℃ ~ +155℃
				±400	1Ω≦R＜10Ω	1Ω≦R＜10Ω	
				±200	1MΩ≦R≦22MΩ	10Ω≦R≦22MΩ	
0603	1/5 W	75V	150V	±200	10Ω≦R＜1MΩ	---	
				±400	1Ω≦R＜10Ω	1Ω≦R＜10Ω	
				±200	1MΩ≦R≦22MΩ	10Ω≦R≦22MΩ	
0805	1/4 W	150V	300V	±200	10Ω≦R＜1MΩ	---	
				±400	1Ω≦R＜10Ω	1Ω≦R＜10Ω	
				±200	1MΩ≦R≦22MΩ	10Ω≦R≦22MΩ	
1206	1/2 W	200V	400V	±200	10Ω≦R＜1MΩ	---	
				±400	1Ω≦R＜10Ω	1Ω≦R＜10Ω	
				±200	1MΩ≦R≦22MΩ	10Ω≦R≦22MΩ	
1210	3/4 W	200V	400V	±200	10Ω≦R＜1MΩ	---	
				±400	1Ω≦R＜10Ω	1Ω≦R＜10Ω	
				±200	1MΩ≦R≦22MΩ	10Ω≦R≦22MΩ	
2010	1 W	200V	400V	±200	10Ω≦R＜1MΩ	---	-55℃ ~ +155℃
				±400	1Ω≦R＜10Ω	1Ω≦R＜10Ω	
				±200	1MΩ≦R≦22MΩ	10Ω≦R≦22MΩ	
2512	2 W	200V	400V	±200	10Ω≦R＜1MΩ	---	
				±400	1Ω≦R＜10Ω	1Ω≦R＜10Ω	
				±200	1MΩ≦R≦22MΩ	10Ω≦R≦22MΩ	

2.2. Power Decay Curve:

Sizes	0402/0603/0805/1206/1210/2010/2512
Working Temperature Range	−55℃ ~ +155℃
clarification	If the ambient temperature exceeds 70℃ to 155℃, the power can be modified according to the curve below.
Power attenuation graph	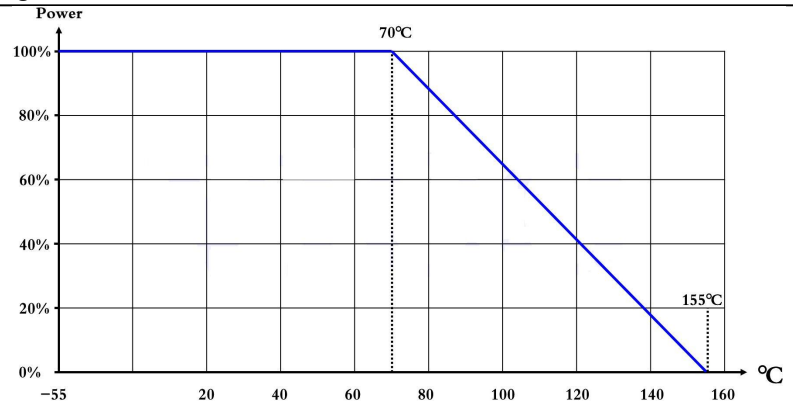

2.3. Rated voltage or rated current:

Resistance Range: ≧1Ω

Rated voltage: DC or AC (commercial rms) voltage for rated power.

Can be obtained by the following formula, but if the value obtained exceeds the maximum voltage in the specification table, then the maximum rated voltage as its rated voltage.

$$E=\sqrt{P\times R}$$

E=Rated voltage (V)
P=Rated power (W)
R=Nominal resistance (Ω)

Rated current flow (I) can be obtained by the following formula:
rated current I = E (rated voltage) / R (nominal resistance)

3. Dimension Drawing

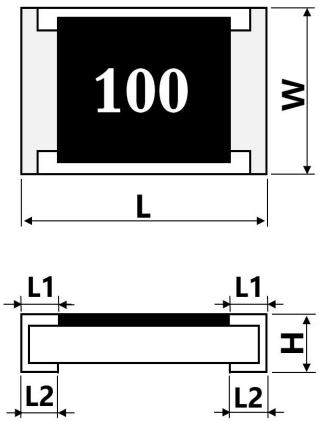

Dimensions / Type	L	W	H	L1	L2
0201	0.60±0.03	0.3±0.03	0.23±0.03	0.10±0.05	0.15±0.05
0402	1.00±0.10	0.50±0.05	0.30±0.05	0.20±0.10	0.25±0.10
0603	1.60±0.10	0.80±0.10	0.45±0.10	0.30±0.15	0.25±0.15
0805	2.00±0.10	1.25±0.10	0.50±0.10	0.35±0.20	0.35±0.20
1206	3.05±0.10	1.55±0.10	0.50±0.10	0.45±0.20	0.40±0.20
1210	3.05±0.10	2.60±0.15	0.55±0.10	0.45±0.20	0.50±0.20
2010	5.00±0.10	2.50±0.15	0.55±0.10	0.45±0.20	0.50±0.20
2512	6.35±0.10	3.10±0.15	0.55±0.10	0.60±0.20	0.50±0.20

4. Structure Plan

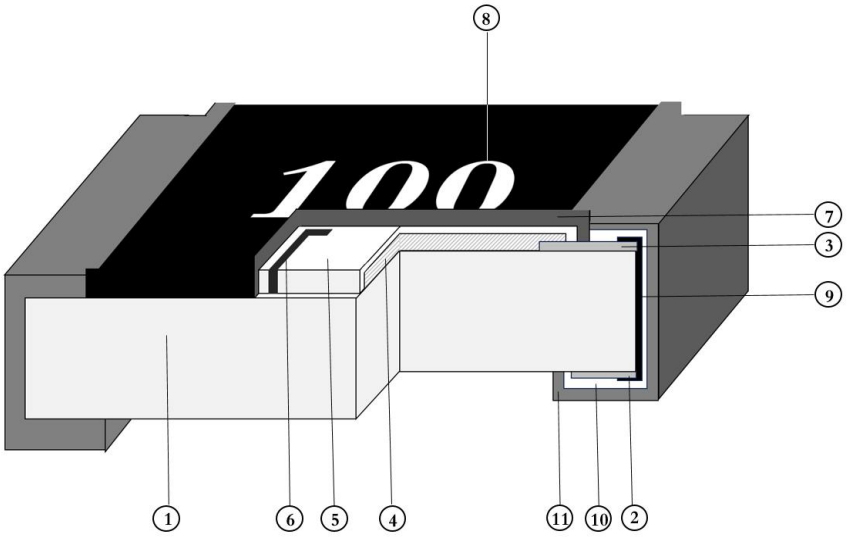

1	Ceramic substrate	7	2nd Protective coating
2	Bottom inner electrode	8	Marking
3	Top inner electrode	9	Terminal inner electrode
4	Resistive layer	10	Ni plating
5	1st Protective coating	11	Sn plating
6	Laser Trimmed	-	-

5. Character Code Representation

Type \ Tolerance	J	F
0402	No Marking	No Marking
0603	3-character code	Reference 6.3
0805/1206/1210/2010/2512	3-character code	4-character code

5.1. 0603/0805/1206/1210/2010/2512 ±5% tolerance:

●Resistance range≥10Ω:Three digits in the E-24 series, with the first two digits being significant and the third digit being a power exponent ($10^{\times}$).

<example> marks→100
100=10*100=10Ω



●Resistance range<10Ω:Three digits in the E-24 series, with the first and third digits being significant and the second digit being a power (10^{-1})

<example> marks→4R7
4R7=47*10-1=4.7Ω



5.2. 0603/0805/1206/1210/2010/2512 F (±1%) B (±0.1%) D (±0.5%) tolerance:

●Resistance range≥100Ω:The E-24 series or E-96 series has 4 digits, with the first three digits being significant and the fourth digit being a power ($10^{\times}$).

<example> marks→1002
1002=100*10²=10000Ω



●Resistance range<100Ω:E-24 series or E-96 series have 4 digits, 3 digits are Significant figures, and R digit is a power exponent ($10^{\times}$).

<example> marks→10R2
10R2=102*10-1=10.2Ω



5.3. 0603 ±1% Tolerance:

●If the resistor is not in the E-96 series or E-24 series, it is marked with the E-24 series and there is a short bar under the marking letter.

<例> Marking→47B
47B=301*101=3010Ω



<例> Marking→471
471=47*101=470Ω



5.4. 0603/0805/1206/1210/2010/2512 : The 0Ω mark is represented by "0".

±1% & ±5% Tolerance


Code Table

E-12 series

10	12	15	18	22	27
33	39	47	56	68	82

E-24 series

10	11	12	13	15	16	18	20	22	24	27	30
33	36	39	43	47	51	56	62	68	75	82	91

E-96 series

100	102	105	107	110	113	115	118	121	124	127	130
133	137	140	143	147	150	154	158	162	165	169	174
178	182	187	191	196	200	205	210	215	221	226	232
237	243	249	255	261	267	274	280	287	294	301	309
316	324	332	340	348	357	365	374	383	392	402	412
422	432	442	453	464	475	487	499	511	523	536	549
562	576	590	604	619	634	649	665	681	698	715	732
750	768	787	806	825	845	866	887	909	931	953	976

EIAJ Code Table

code	Ω	code	Ω	code	Ω	code	Ω	code	Ω	code	Ω	code	Ω	code	Ω
01	100	13	133	25	178	37	237	49	316	61	422	73	562	85	750
02	102	14	137	26	182	38	243	50	324	62	432	74	576	86	768
03	105	15	140	27	187	39	249	51	332	63	442	75	590	87	787
04	107	16	143	28	191	40	255	52	340	64	453	76	604	88	806
05	110	17	147	29	196	41	261	53	348	65	464	77	619	89	825
06	113	18	150	30	200	42	267	54	357	66	475	78	634	90	845
07	115	19	154	31	205	43	274	55	365	67	487	79	649	91	866
08	118	20	158	32	210	44	280	56	374	68	499	80	665	92	887
09	121	21	162	33	215	45	287	57	383	69	511	81	681	93	909
10	124	22	165	34	221	46	294	58	392	70	523	82	698	94	931
11	127	23	169	35	226	47	301	59	402	71	536	83	715	95	953
12	130	24	174	36	232	48	309	60	412	72	549	84	732	96	976

$Y=10^{-2}$ $X=10^{-1}$ $A=10^{0}$ $B=10^{1}$ $C=10^{2}$ $D=10^{3}$ $E=10^{4}$ $F=10^{5}$

6. Reliability Test Items

Item	Conditions	Specifications Resistors
TCR	$TCR\ (ppm/^{\circ}C) = \frac{(R2-R1)}{R1\ (T2-T1)} \times 10^6$ R1:Measured resistance at room temperature(Ω) R2:Measured resistance at -55°Cor+125°C.(Ω) T1:room temperature(°C) T2:Temperatures of -55°Cor+125°C(°C)。 According to JIS-C5201-14.8	Reference 3. Specification Sheet
Short Time Overload	Apply 2.5 times the rated voltage(2.5 times the rated voltage or the maximum overload voltage,which ever is less) for 5 seconds,release the load for about 30 minutes,and then measure the resistance variance.(For rated voltage,refer to General Specification No.3.) According to JIS-C5201-14.13	F:△R≤±(1%R+0.05Ω) J:△R≤±(2%R+0.05Ω) No damage to appearance,no short circuits or burnouts.
Solderability	Immerse the resistor in the furnace at 235±5°C for 2 seconds,then remove it and place it under a microscope to observe the solder area AccordingtoJIS-C5201-14.17	Conductor tin eating area should be more than 95%. Appearance without damage.
Resistant to Solder Heat	◎Test Item I(SolderOvenTest): Immerse in tin furnace at 260+5/-0°C for 10 seconds +1/-0, remove and leave for more than 60 minutes,then measure the resistance change rate. ◎Test Item II(SolderOvenTest): Immerse in a tin furnace at 260+5/-0°C for 30+1/-0 seconds, remove and rinse.Place under a microscope to observe the area of the solder. ◎Test item III(solderingirontest): Heating temperature:350±10°C Heating time of soldering iron:3+1/-0sec. Take the electric chromium iron to heat up both ends of the electrode,take it out and leave it for more than 60 hours,then measure the resistance change rate. According to MIL-STD-202 Method 210	Pilot project I: (1).Resistance change rate Resistance Range:≧1Ω △R%=±(1.0%+0.05Ω) (2).The electrodes have no abnormal appearance and no side guide detachment. Pilot project II: (1).The tin-eating area of the conductor shall be greater than 95%. (2).The underlying material(e.g. White substrate)should not be visible at the edge of the electrode. Pilot project III. (1).Resistance change rate Resistance Range:≧1Ω △R%=±(1.0%+0.05Ω) (2).No abnormalities in electrode appearance,no side guide detachment
Thermal Shock	The specimen is subjected to a high and low temperature chamber varying in temperature from -55°C to 125°C for 5 minutes for a total of 1000 cycles.The specimen is then removed,stabilised at room temperature for 24 hours ±4 hours or more,and its electrical resistance variance measured. According to JESD22 Method JA-104	△R%=±(2.0%+0.05Ω)
Substrate Bending Test	Solder the sample on the test PCB and place the PCB on the bend tester adding force to the centre of the PCB,the duration of the applied force should be 60(±5) seconds.Measure its resistance variance ratio in load.Bend Depth(D) 0402、0603、0805=5 mm 0201、1206、1210=3mm 2010、2512=2 mm AccordingtoAEC-Q200-005	△R%=±(1.0%+0.05Ω) There is no damage to the appearance,no side guide detachment and no breakage occurs.
End Electrode Pull Test	Test item 1:Solder the resistor to the circuit board,apply a force of 5N to the back of the resistor for 10 sec,and check the appearance of the side conductor. Test item 2:Solder the resistor to the circuit board,gradually apply force to the back of the resistor,and test the maximum peel strength ofthe end electrode. According to AEC-Q200-006	Item I:No damage in appearance,no side guide detachment and body breakage occur. Item II:Tensile strength≧5N
Heat resistance test	The specimens are placed in a chamber at a temperature of 155±3°C for 1000 hours,then removed,stabilised at room temperature for 24 hours ± 4 hours or more,and their resistance variance measured.AccordingtoMIL-STD-202Method108	F:△R≤±(1%R+0.05Ω) J:△R≤±(2%R+0.05Ω)

Humidity load	Temperature 85°C、Humidity 85%、10% Rated Power Current,Placement 1000 hours. Based on MIL-STD-202 Method 103.	F:△R≤±(2%R+0.05Ω) J:△R≤±(3%R+0.05Ω)
Electro static discharge	Human body mode,two discharges,1 each for positive and negative polarity. According to AEC-Q200-002	No damage to appearance △R≤±(3.0%R+0.05Ω)
Load life	125°C±2°C,1000 hours,voltage at 36% of rated power (current) value or component limit voltage(whichever is less),1.5 hours on / 0.5 hours off. According to MIL-PRF-27	F:△R≤±(2%R+0.05Ω) J:△R≤±(3%R+0.05Ω)

7.Recommended Soldering Conditions

7.1 Recommended reflow soldering curve

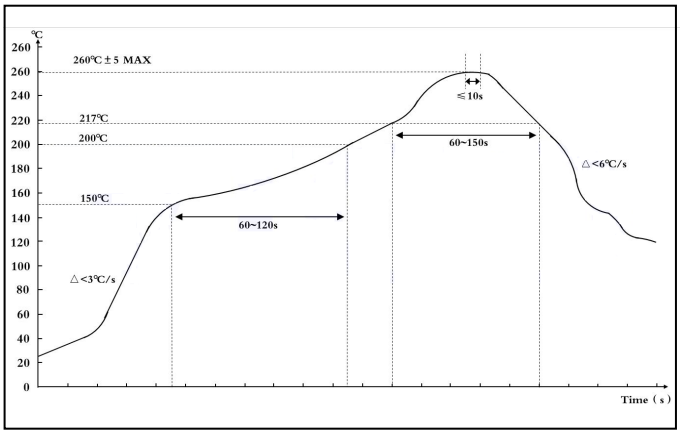

7.2 Recommended wave soldering curve

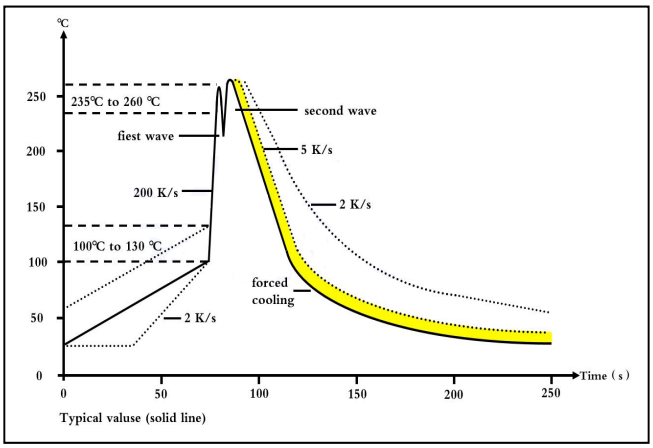

7.3 Recommended solder past type 96.5Sn/3.0Ag/0.5Cu

8. Plating Thickness

9.1 Nickel Layer Thickness: ≧2μm

9.2 Pure Tin: ≧3μm

9.3 Electroplated Pure Tin as Misty Tin

9. Resistance Test Package Standard Measurement Location

Back side Electrode Measurement

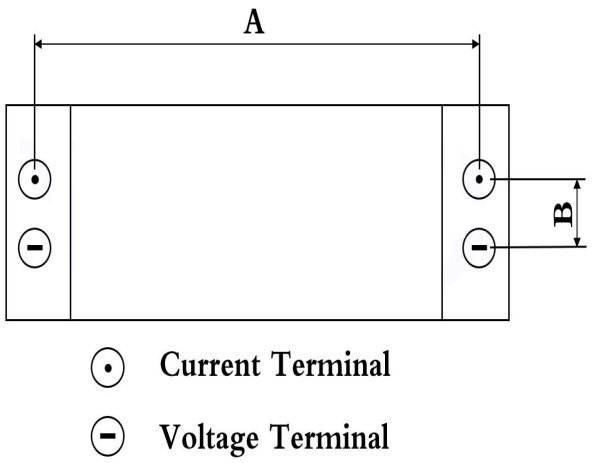

Unit : mm

TYPE \ DIM	A	B
0402	0.80±0.05	0.24±0.05
0603	1.35±0.05	0.35±0.05
0805	1.80±0.05	0.35±0.05
1206	2.90±0.05	0.35±0.05
1210	2.90±0.05	0.35±0.05
2010	4.50±0.05	1.15±0.05
2512	5.9±0.05	1.60±0.05

10. Storage Period

It can be stored for two years under the conditions of -5~40℃ and 20~75% of storage environment.

11. Packaging Specification

1. Scope of Application: This acknowledgement applies to lead-free and halogen-free thick film chip resistors produced by our company.
2. Carrier Tape Size:

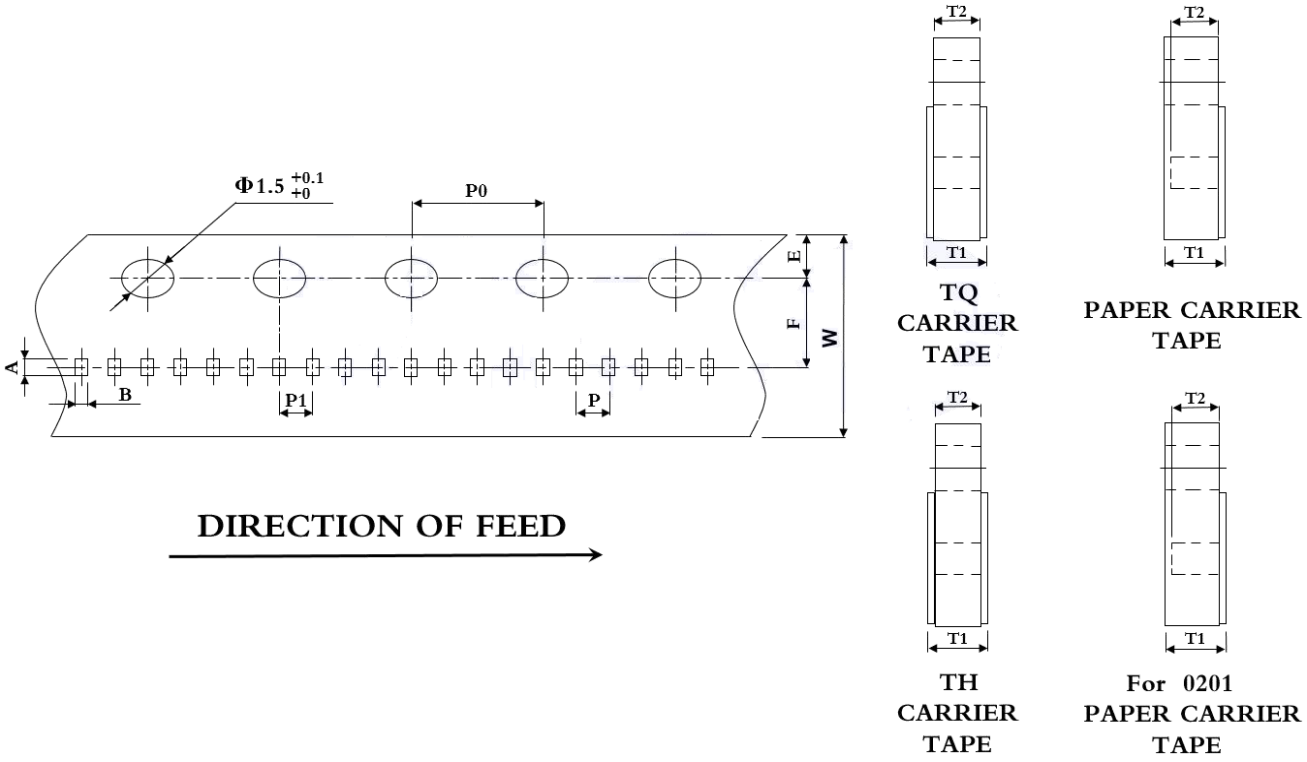

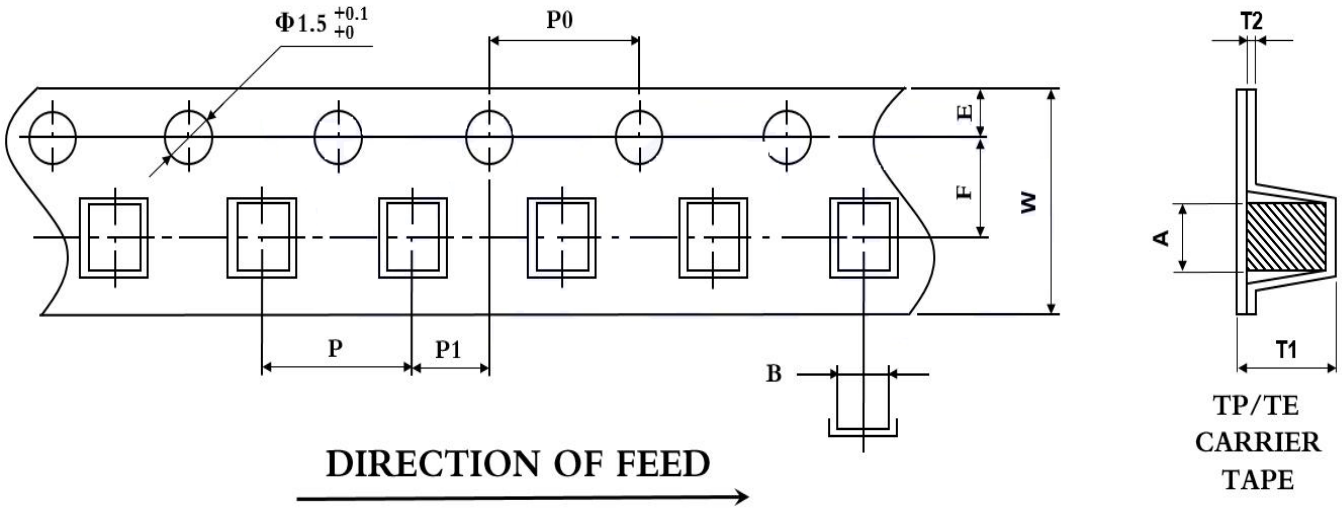

3. Single Resistor

Packaging	Single Size	Dimensions (mm)										
		A	B	W	E	F	T1	T2	P	P0	10xP0	P1
TH Carrier Tape	0402	1.15±0.05	0.65±0.05	8.00±0.20	1.75±0.10	3.50±0.05	0.40+0.2/-0	0.40±0.05	2.00±0.10	4.00±0.05	40.00±0.20	2.00±0.05
	0603	1.80±0.10	1.00±0.10	8.00±0.20	1.75±0.10	3.50±0.05	0.60+0.2/-0	0.60±0.10	2.00±0.10	4.00±0.05	40.00±0.20	2.00±0.05
TP Carrier Tape	0603	1.80±0.10	1.00±0.10	8.00±0.20	1.75±0.10	3.50±0.05	0.60+0.2/-0	0.60±0.10	4.00±0.10	4.00±0.05	40.00±0.20	2.00±0.05
	0805	2.30±0.10	1.55±0.10	8.00±0.20	1.75±0.10	3.50±0.05	0.75+0.2/-0	0.75±0.10	4.00±0.10	4.00±0.05	40.00±0.20	2.00±0.05
	1206	3.50±0.20	1.90±0.20	8.00±0.20	1.75±0.10	3.50±0.05	0.75+0.2/-0	0.75±0.10	4.00±0.10	4.00±0.05	40.00±0.20	2.00±0.05
	1210	3.50±0.20	2.80±0.20	8.00±0.20	1.75±0.10	3.50±0.05	0.75+0.2/-0	0.75±0.10	4.00±0.10	4.00±0.05	40.00±0.20	2.00±0.05
TE	2010	5.50±0.20	2.80±0.20	12.00±0.20	1.75±0.10	5.50±0.05	1.10±0.15	0.23±0.15	4.00±0.10	4.00±0.05	40.00±0.20	2.00±0.05
	2512	6.70±0.20	3.40±0.20	12.00±0.20	1.75±0.10	5.50±0.05	1.10±0.15	0.23±0.15	4.00±0.10	4.00±0.05	40.00±0.20	2.00±0.05

4. Front and Rear Guide Belt Dimensions:

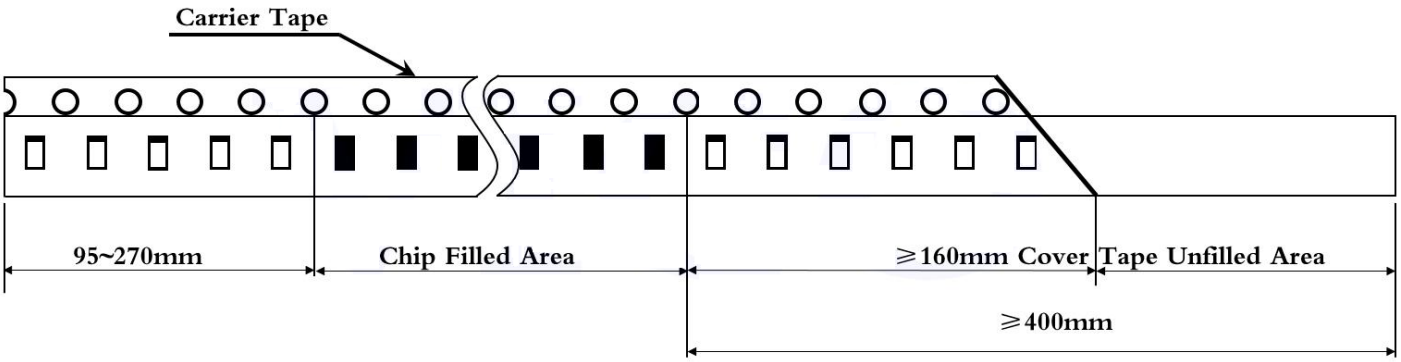

5. Upper tape peeling force:

Type(Size)	Specifications
01005、0201、0402	0.07~0.5N(7.1~51gf)
Other	0.07~0.7N(7.1~71.4gf)

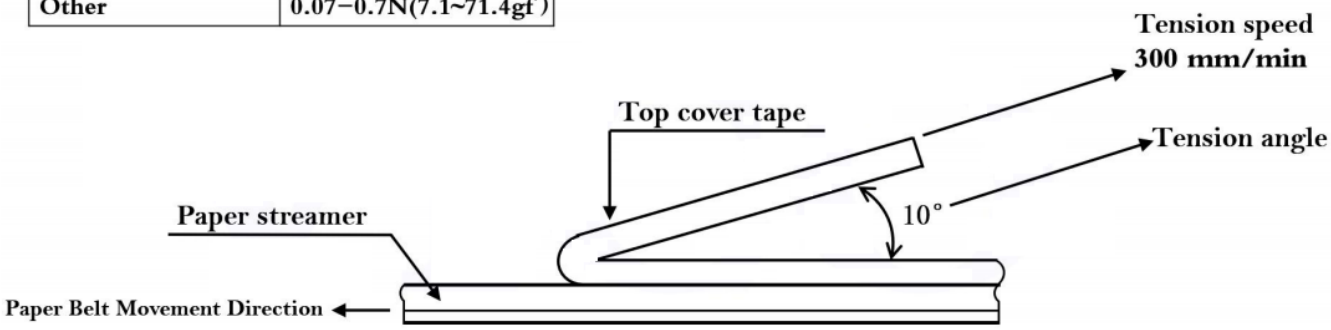

6. Packaging type:

Unit: pcs/reel

SIZE	7 “reel for 8 mm tape	7 “reel for 12 mm tape	13 “reel for 8mm tape
0402	10000		50000
0603	5000		20000/25000
0805	5000		20000/25000
1206	5000		20000/25000
1210	5000		20000
2010		4000	
2512		4000	

6.1 Typical Packaging Types:

TH,TP Material: paper or PE tape.

TE Material: embossed tape.

6.2 Other types of packaging are available upon request.

7. Plastic disc size:

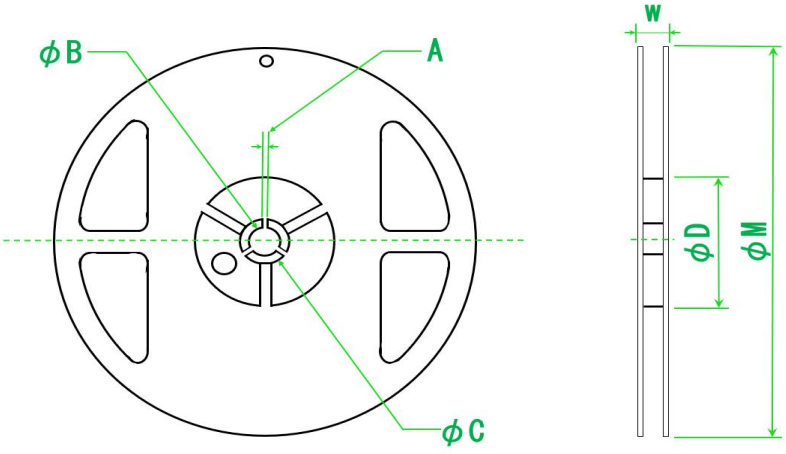

Reel Type /Tape	Wa	M	A	B	C	D
7"reel for 8 mm tape	9.0±0.5	178±0.5	2.0±0.5	13.5±0.5	21.0±0.5	60.0±1.0
7"reel for 12 mm tape	13.8±0.5	178±0.5				80.0±1.0
13"reel for 8 mm tape	10.0±0.5	330±0.5				100.0±1.0

8.1 Inner box size:

Number of scrolls	D (mm)
1	12
2	24
3	36
4	48
5	60
6	72
7	84
8	96
9	108
10	120

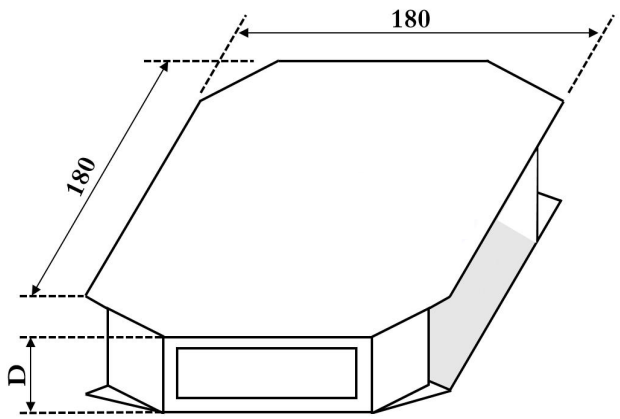

8.2 Outer box size:

Number of boxes	lengths (mm)	breadth (mm)	heights (mm)
2	272	205	210
6	375	368	195
8	544	380	210

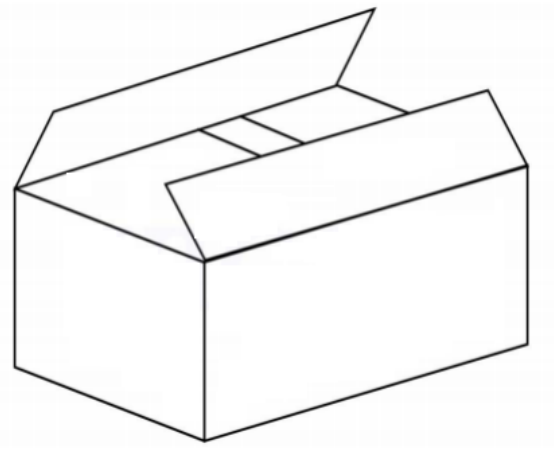

Outer box size: 37x36.8x19.5cm Material new material: KEB
Packing Quantity: 0402 600K; 0603~1210 300K; 2010~2512 168K;

12. Precautionary Note

Chip resistors are widely used as standard products, so the application of this product may be affected in some specific environments.

1. If you intend to use our products in equipment requiring extremely high reliability (e.g., medical equipment, aircraft/spacecraft, nuclear power controllers, automotive electronics, etc.), the failure of which may result in the loss of human life, bodily injury, or serious damage to property, please consult with an ChipNobo sales representative in advance.

Unless prior written consent is given by ChipNobo

the above specific applications are not permitted to be used in any manner whatsoever. ChipNobo shall not be liable for any loss or expense incurred by you or any third party as a result of the use of this equipment.

2. ChipNobo designs and manufactures its products under a strict quality control system; however,

electronic products may fail or malfunction in some unusual applications.

Users are requested to implement safety measures in accordance with their responsibilities,

including but not limited tophysical injury, damage to any property.

The following are examples of safety measures:

[A] Installation of protective circuits or other protective devices to enhance system safety

[B] Installation of redundant circuits to reduce the effects of single or multiple circuit failures

3. The products are not designed to be used in special environments or conditions, so performance may be affected when used in the following special environments:

[A]Products are intended for use in any type of liquid, including water, oil, chemicals and organic solvents.

[B] the product is outdoors or where the product is exposed to direct sunlight or dust.

[C]the product is exposed to sea breezes or corrosive gases, including : Cl2、H2S、NH3、SO2、NO2.

[D] products exposed to static electricity or electromagnetic waves.

[E]The product is close to heat generating parts, plastic cords, or other flammable items.

[F]Products sealed or coated with resin or other coating materials our products

[G]Products are soldered with non-clean flux, or products are cleaned with water or water-soluble cleaning agents.

[H]Products are used in places where dew condensation occurs.

4. Our products are not designed to protect against radiation.

5. Avoid power ratings that exceed the normal operation of the product, especially for transient loads (applying a large amount of load for a short period of time, e.g. pulsed applications). There may be a negative impact on product performance.

6. Be careful when using hard objects in contact with the product, which may cause product damage due to external factors.

NOTICE

The information presented in this document is for reference only. Involving product optimization and productivity improvement, ChipNobo reserves the right to adjust product indicators and upgrade some technical parameters. ChipNobo is entitled to be exempted from liability for any delay or non-delivery of the information disclosure process that occurs.
本文件中提供的信息仅供参考。涉及产品优化和生产效率改善，ChipNobo 有权调整产品指标和部分技术参数的升级，所出现信息披露过程存在延后或者不能送达的情形，ChipNobo 有获免责权。

The product listed herein is designed to be used with residential and commercial equipment, and do not support sensitive items and specialized equipment in areas where sanctions do exist. ChipNobo Co., Ltd or anyone on its behalf, assumes no responsibility or liability for any damages resulting from improper use.
此处列出的产品旨在民用和商业设备上使用，不支持确有制裁地区的敏感项目和特殊设备，ChipNobo 有限公司或其代表，对因不当使用而造成的任何损害不承担任何责任。

For additional information, please visit our website http://www.chipnobo.com, or consult your nearest Chipnobo sales office for further assistance.
欲了解更多信息，请访问我们的网站 http://www.chipnobo.com，或咨询离您最近的 Chipnobo 销售办事处以获得进一步帮助。