

钍地半导体
Tudi Semiconductor

Product Specification

TUDI-TL2842B/TL2843B/TL2844B/TL2845B/ TL3842B/TL3843B/TL3844B/TL3845B

High-Performance Current-Mode PWM Controller

网址 www.sztdbdt.com

用芯智造·卓越品质

semiconductor device manufacturer

- Design
- research and development
- production
- and sales

Features

- Low starting current (<0.5 mA)
- Optimized oscillator discharge current
- Operates in 500 kHz current mode
- Automatic feedforward compensation
- Lock-based PWM for periodic current limiting
- Internal calibrated reference with under-voltage lockout
- High-current totem-pole output with hysteresis and under-voltage lockout
- Dual-pulse suppression

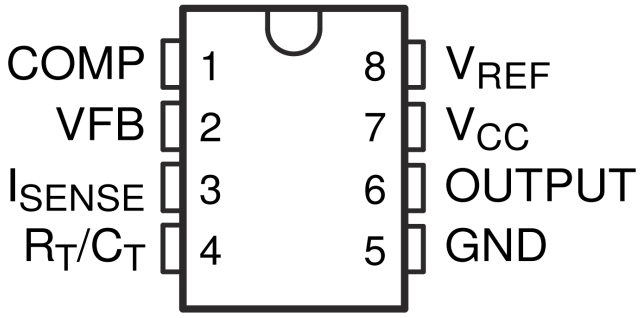

SOP8/DIP8

Description

The TL284xB and TL384xB series control integrated circuits provide the functionality required for offline or DC-to-DC fixed-frequency current-mode control solutions, utilizing only a minimal number of external components. The internal circuitry includes an undervoltage lockout (UVLO) mechanism and a trimmed circuit that delivers a high-precision reference voltage with excellent accuracy at the error amplifier input. Additional internal components consist of logic circuits ensuring lockout operation, a pulse-width modulation (PWM) comparator for current-limiting control, and a totem-pole output stage specifically designed to supply or absorb peak currents. When the output stage is turned off, the output level for driving N-channel MOSFETs remains low.

The TL284xB and TL384xB series products are pin-compatible with standard TL284x and TL384x models but feature several improvements: a rated start-up current of 0.5 mA (maximum) and an oscillator discharge current trimmed to 8.3 mA (typical). Additionally, under undervoltage lockout conditions, the output delivers a maximum saturation voltage of 1.2 V while consuming 10 mA of current (V_{CC} = 5 V).

The primary differences among these series are the UVLO thresholds and maximum duty cycle ranges; the typical UVLO thresholds of 16 V (on) and 10 V (off) on the TLx842B and TLx844B models make them particularly suitable for offline applications. The typical thresholds for the TLx843B and TLx845B devices are 8.4 V (on) and 7.6 V (off), respectively. These devices operate with duty cycles approaching 100%. With an additional internal switching trigger, the TLx844B and TLx845B support a duty cycle range of 0% to 50%, where this trigger locks the output at each clock cycle. Devices in the TL284xB series are rated for operating temperatures from –40°C to 85 °C, while those in the TL384xB series operate within 0°C to 70°C.

Applications

- Switching regulators of any polarity
- Transformer-coupled DC/DC converters

Pin Functions

PIN		Type(1)	DESCRIPTION
NAME	D or P(8 pins)		
COMP	1	I/O	Error amplifier compensation pin
GND	5	-	Device power supply ground terminal
ISENSE	3	I	Current sense comparator input
OUTPUT	6	O	PWM Output
REF	8	O	Oscillator voltage reference
RT/CT	4	I/O	Oscillator RC input
VCC	7	-	Device positive voltage supply
VFB	2	I	Error amplifier input

(1) I= Input; O = Output; I/O = Input or Output

Specifications

Absolute Maximum Ratings

over operating free-air temperature range (unless otherwise noted) (1) (2)

			MIN	MAX	UNIT
V_{CC}	Supply voltage	Low impedance source		30	V
		I_{CC}<30 mA		Self limiting	
V_I	Analog input voltage range	VFB and I_{SENSE}	-0.3	6.3	V
I_{CC}	Supply current			30	mA
I_O	Output current			± 1	A
$I_{O(sink)}$	Error amplifier output sink current			10	mA
	Output energy	Capacitive load		5	μ J
T_J	Virtual junction temperature			150	℃
T_{stg}	Storage temperature range		-65	150	℃

(1) Operation outside the Absolute Maximum Ratings may cause permanent device damage.
Absolute Maximum Ratings do not imply functional operation of the device at these or any other conditions beyond those listed under Recommended Operating Conditions. If used outside the Recommended Operating Conditions but within the Absolute Maximum Ratings, the device may not be fully functional, and this may affect device reliability, functionality, performance, and shorten the device lifetime.
(2) All voltages are with respect to the device GND terminal.

ESD Ratings

			VALUE	UNIT
$V_{(ESD)}$	Electrostatic discharge	Human body model (HBM),per ANSI/ESDA/ JEDEC JS-001,all pins(1)	±3000	V
		Charged device model (CDM),per JEDEC specificationJESD22-C101,all pins(2)	±2000	

(1) JEDEC document JEP155 states that 500-V HBM allows safe manufacturing with a standard ESD control process.
(2) JEDEC document JEP157 states that 250-V CDM allows safe manufacturing with a standard ESD control process.

Recommended Operating Conditions

			MIN	NOM	MAX	UNIT
V_{CC}	Supply voltage	V_{CC}			30	V
		V_C[1]			30	
V_I	Input voltage	RT/CT	0		5.5	V
		VFB and I_{SENSE}	0		5.5	
V_O	Output voltage	OUTPUT	0		30	V
		POWER GROUND[1]	-0.1		1	
I_{CC}	Supply current,externally limited				25	mA
I_O	Average output current				200	mA
$I_{O(ref)}$	Reference output current				-20	mA
f_{OSC}	Oscillator frequency			100	500	kHz
T_J	Operating free-air temperature	TL284xB	-40		85	℃
		TL384×B	0		70	

Thermal Information

THERMAL METRIC		TLx84xB		UNIT
		D	P	
		8 PINS	8 PINS	
$R_{\theta JA}$	Junction-to-ambient thermal resistance	117.4	74.1	℃/W

Reference Section Electrical Characteristics

V_{CC} = 15 V[1], R_T =10 kΩ, C_T = 3.3 nF, over recommended operating free-air temperature range (unless otherwise specified)

PARAMETER	TEST CONDITIONS	TL284xB			TL384xB			UNIT
		MIN	TYP[2]	MAX	MIN	TYP[2]	MAX	
Output voltage	I_O=1mA,T_J=25℃	4.95	5	5.05	4.9	5	5.1	V
Line regulation	V_{CC}=12V to 25V		6	20		6	20	mV
Load regulation	I_O=1mA to 20 mA		6	25		6	25	mV
Average temperature coefficient of output voltage			0.2	0.4		0.2	0.4	mV℃
Output voltage,worst-casevariation	V_{CC}=12V to 25V, I_O=1 mA to 20 mA	4.9		5.1	4.82		5.18	V
Output noise voltage	f=10 Hz to 10 kHz, T_J=25℃		50			50		μ V
Output-voltage long-term drift	After 1000 h atT_J=25℃		5	25		5	25	mV
Short-circuit output current		-30	-100	-180	-30	-100	-180	mA

(1) Adjust V_{CC} above the start threshold before setting V_{CC} to 15 V.

(2) All typical values are at T_J = 25°C.

Oscillator Section Electrical Characteristics

V_{CC}= 15 V[1], R_T = 10 kΩ, C_T = 3.3 nF, over recommended operating free-air temperature range(unless otherwise specified)(3)

PARAMETER	TEST CONDITIONS	TL284xB			TL384xB			UNIT
		MIN	TYP[2]	MAX	MIN	TYP[2]	MAX	
Initial accuracy	T_J=25°C	47	52	57	47	52	57	kHz
	T_A=Tlow to Thigh	44		60	44		60	
	T_J=25°C,R_T=6.2kΩ,C_T= 1nF	225	250	275	225	250	275	
Voltage stability	V_{CC}=12V to 25V		0.2	1		0.2	1	%
Temperature stability			5			5		%
Amplitude	Peak to peak		1.7			1.7		V
Discharge current	T_J=25°C,R/C_T=2V	7.8	8.3	8.8	7.8	8.3	8.8	mA
	R_T/C_T=2V	7.5		8.8	7.6		8.8	

(1) Adjust V_{CC} above the start threshold before setting it to 15 V.
(2) All typical values are at T_J = 25°C.
(3) Output frequency equals oscillator frequency for the TL3842B and TL3843B. Output frequency is one-half the oscillator frequency for the TL3844B and TL3845B.

Error-Amplifier Section Electrical Characteristics

V_{CC}= 15 V[1], R_T = 10 kΩ, C_T = 3.3 nF, over recommended operating free-air temperature range(unless otherwise specified)

PARAMETER	TEST CONDITIONS	TL284xB			TL384xB			UNIT
		MIN	TYP[2]	MAX	MIN	TYP[2]	MAX	
Feedback input voltage	COMP=2.5V	2.45	2.5	2.55	2.42	2.5	2.58	V
Input bias current			-0.3	-0.1		-0.3	-2	μA
Open-loop voltage amplification	V_O=2V to 4V	65	90		65	90		dB
Gain-bandwidth product		0.7	1		0.7	1		MHz
Supply-voltage rejection ratio	V_{CC}=12V to 25V	60	70		60	70		dB
Output sink current	VFB=2.7V,COMP=1.1V	2	6		2	6		mA
Output source current	VFB=2.3V,COMP=5V	-0.5	-0.8		-0.5	-0.8		mA
High-level output voltage	VFB=2.3V,R_L=15kΩ to GND	5	6		5	6		V
Low-level output voltage	VFB=2.7V,R_L=15 kΩ to GND		0.7	1.1		0.7	1.1	V

(1) Adjust V_{CC} above the start threshold before setting it to 15 V.
(2) All typical values are at T_J = 25°C.

Current-Sense Section Electrical Characteristics

V_{CC}= 15 V[4], R_T = 10 kΩ, C_T = 3.3 nF, over recommended operating free-air temperature range (unless otherwise specified)

PARAMETER	TEST CONDITIONS	TL284xB			TL384xB			UNIT
		MIN	TYP[1]	MAX	MIN	TYP[1]	MAX	
Voltage amplification[2][3]		2.85	3	3.15	2.85	3	3.15	VN
Current-sense comparator threshold[2]	COMP=5V	0.9	1	1.1	0.9	1	1.1	V
Supply-voltage rejection ratio[2]	V_{CC}=12V to 25V		70			70		dB
Input bias current			-2	-10		-2	-10	μA
Delay time to output	VFB=0V to 2V		150	300		150	300	ns

(1) All typical values are at T_J = 25°C.
(2) Measured at the trip point of the latch, with VFB at 0 V.
(3) Measured between I_{SENSE} and COMP, with the input changing from 0 V to 0.8 V.
(4) Adjust V_{CC} above the start threshold before setting V_{CC} to 15 V

Output Section Electrical Characteristics

V_{CC}= 15 V[2], R_T = 10 kΩ, C_T = 3.3 nF, over recommended operating free-air temperature range(unless otherwise specified)

PARAMETER	TEST CONDITIONS	TL284xB			TL384xB			UNIT
		MIN	TYP(1)	MAX	MIN	TYP(1)	MAX	
High-level output voltage	I_{OH}=-20 mA	13	13.5		13	13.5		V
	I_{OH}=-200 mA	12	13.5		12	13.5		
Low-level output voltage	I_{OL}=20 mA		0.1	0.4		0.1	0.4	V
	I_{OL}=200 mA		1.5	2.2		1.5	2.2	
Rise time	C_L=1nF,T_J=25℃		25	150		25	150	ns
Fall time	C_L=1nF,T_J=25℃		25	150		25	150	ns
UVLO saturation	V_{CC}=5V,I_{OL}=1 mA		0.7	1.2		0.7	1.2	V

(1) All typical values are at T_J = 25°C.
(2) Adjust V_{CC} above the start threshold before setting it to 15 V.

Undervoltage-Lockout Section Electrical Characteristics

V_{CC}= 15 V[2], R_T = 10 kΩ, C_T = 3.3 nF, over recommended operating free-air temperature range (unless otherwise specified)

PARAMETER	TEST CONDITIONS	TL284xB			TL384xB			UNIT
		MIN	TYP(1)	MAX	MIN	TYP(1)	MAX	
Start threshold voltage	TLx842B,TLx844B	15	16	17	14.5	16	17.5	V
	TLx843B,TLx845B	7.8	8.4	9	7.8	8.4	9	
Minimum operating voltage after start-up	TLx842B,TLx844B	9	10	11	8.5	10	11.5	V
	TLx843B,TLx845B	7	7.6		7	7.6	8.2	

(1) All typical values are at T_J = 25°C.
(2) Adjust V_{CC} above the start threshold before setting it to 15 V.

Pulse-Width Modulator Section Electrical Characteristics

V_{CC}= 15 V[2], R_T = 10 kΩ, C_T = 3.3 nF, over recommended operating free-air temperature range (unless otherwise specified)

PARAMETER	TEST CONDITIONS	TL284xB			TL384xB			UNIT
		MIN	TYP(1)	MAX	MIN	TYP(1)	MAX	
Maximum duty cycle	TLx842B,TLx843B	92	96	100	92	96	100	%
	TLx844B,TLx845B	46	48	50	46	48	50	
Minimum duty cycle				0			0	%

(1) All typical values are at T_J = 25°C.
(2) Adjust V_{CC} above the start threshold before setting it to 15 V.

Supply Voltage Electrical Characteristics

V_{CC}= 15 V[2], R_T = 10 kΩ, C_T = 3.3 nF, over recommended operating free-air temperature range(unless otherwise specified)

PARAMETER	TEST CONDITIONS	TL284xB			TL384xB			UNIT
		MIN	TYP(1)	MAX	MIN	TYP(1)	MAX	
Start-up current			0.3	0.5		0.3	0.5	mA
Operating supply current	VFB and I_{SENSE} at 0V		11	17		11	17	mA
Limiting voltage	I_{CC}=25 mA	30	39		30	39		V

(1) All typical values are at T_J = 25°C.
(2) Adjust V_{CC} above the start threshold before setting it to 15 V.

Detailed Description

Functional Block Diagram

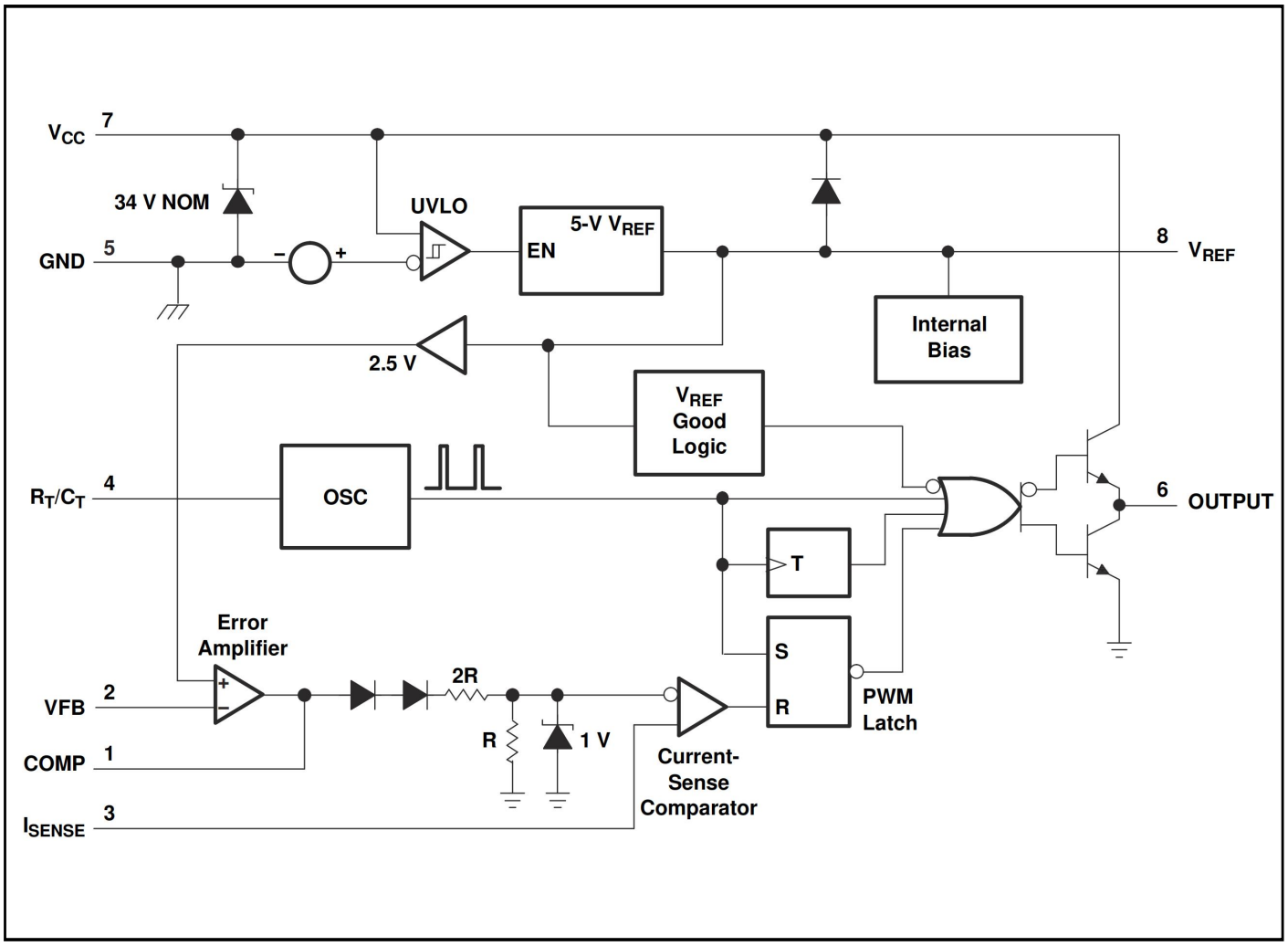

Order information

Order Number	Package	Package Quantity	Marking On The park	Temperature
TL2842BDR-8-TUDI	SOP8	Tape,Reel,4000	2842B	-40℃ to 85℃
TL2842BP-TUDI	DIP8	Tube,50,A box of 2000	TL2842BP	
TL2843BDR-8-TUDI	SOP8	Tape,Reel,4000	2843B	
TL2843BP-TUDI	DIP8	Tube,50,A box of 2000	TL2843BP	
TL2844BDR-8-TUDI	SOP8	Tape,Reel,4000	2844B	
TL2845BDR-8-TUDI	SOP8	Tape,Reel,4000	2845B	
TL3842BDR-8-TUDI	SOP8	Tape,Reel,4000	3842B	0℃ to 70℃
TL3842BP-TUDI	DIP8	Tube,50,A box of 2000	TL3842BP	
TL3843BDR-8-TUDI	SOP8	Tape,Reel,4000	3843B	
TL3843BP-TUDI	DIP8	Tube,50,A box of 2000	TL3843BP	
TL3844BDR-8-TUDI	SOP8	Tape,Reel,4000	3844B	
TL3844BP-TUDI	DIP8	Tube,50,A box of 2000	TL3844BP	
TL3845BDR-8-TUDI	SOP8	Tape,Reel,4000	3845B	
TL3845BP-TUDI	DIP8	Tube,50,A box of 2000	TL3845BP	

Revision history

	Date	Revision	Page
V1.0	2023/10	New	1-11
V1.1	2025/3	Update model and PDF template	1-15

Package SOP8

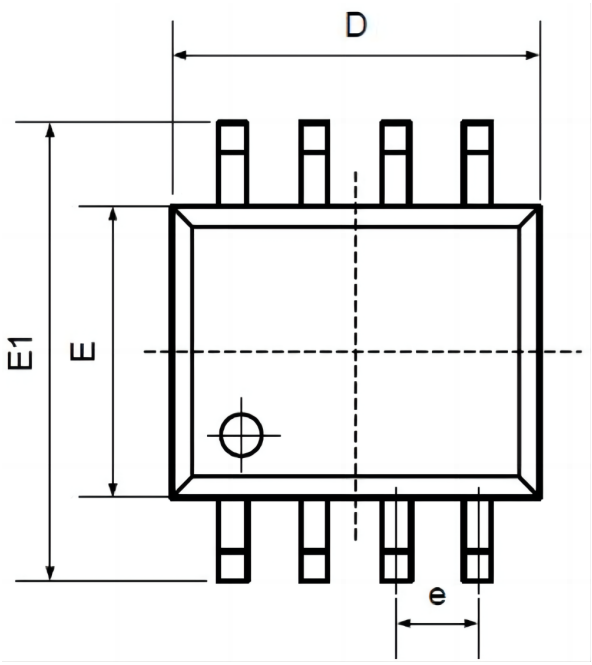

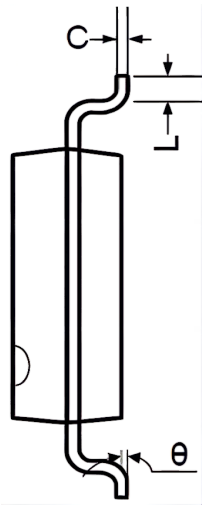

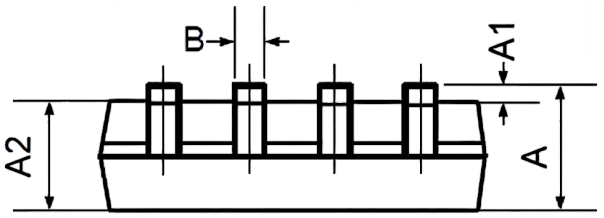

Symbol	Dimensions In Millimeters		Dimensions In Inches	
	Min	Max	Min	Max
A	1.350	1.750	0.053	0.069
A1	0.100	0.250	0.004	0.010
A2	1.350	1.550	0.053	0.061
B	0.330	0.510	0.013	0.020
C	0.190	0.250	0.007	0.010
D	4.780	5.000	0.188	0.197
E	3.800	4.000	0.150	0.157
E1	5.800	6.300	0.228	0.248
e	1.270TYP		0.050TYP	
L	0.400	1.270	0.016	0.050
θ	0°	8°	0°	8°

Package DIP8

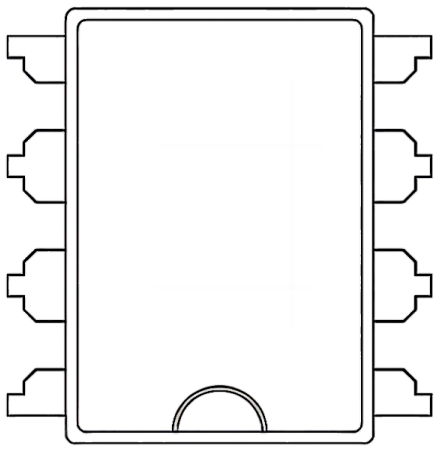

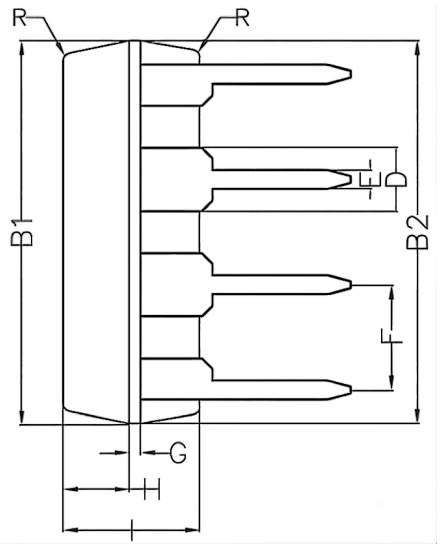

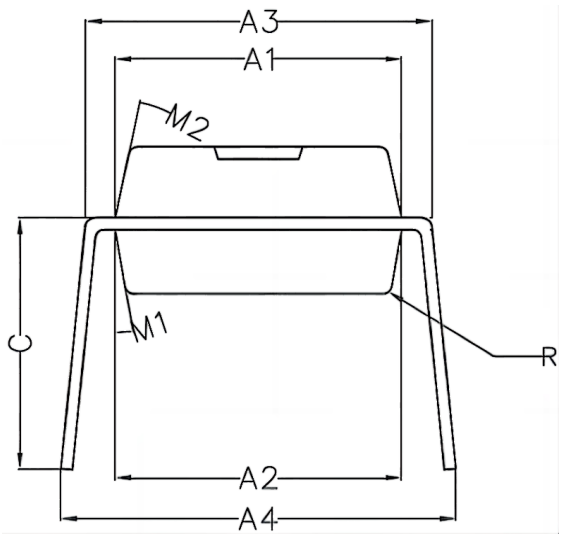

Symbol	Min	Non	Max
A1	6.28	6.33	6.38
A2	6.33	6.38	6.43
A3	7.52	7.62	7.72
A4	7.80	8.40	9.00
B1	9.15	9.20	9.25
B2	9.20	9.25	9.30
C		5.57	
D		1.52	
E	0.43	0.45	0.47
F		2.54	
G		0.25	
H	1.54	1.59	1.64
工	3.22	3.27	3.32
R		0.20	
M1	9°	10°	11°
M2	11°	12°	13°

Important statement:

●TUDI Semiconductor reserves the right to modify the product manual without prior notice! Before placing an order, customers need to confirm whether the obtained information is the latest version and verify the completeness of the relevant information.

●Any semi-guide product is subject to failure or malfunction under specified conditions. It is the buyer's responsibility to comply with safety standards when using TUDI Semiconductor products for system design and whole machine manufacturing.And take the appropriate safety measures to avoid the potential in the risk of loss of personal injury or loss of property situation!

●TUDI Semiconductor products have not been licensed for life support, military, and aerospace applications,and therefore TUDI Semiconductor is not responsible for any consequences arising from the use of this product in these areas.

●If any or all TUDI Semiconductor products (including technical data, services) described or contained in this document are subject to any applicable local export control laws and regulations, they may not be exported without an export license from the relevant authorities in accordance with such laws.

●The specifications of any and all TUDI Semiconductor products described or contained in this document specify the performance, characteristics, and functionality of said products in their standalone state, but do not guarantee the performance, characteristics, and functionality of said products installed in Customer's products or equipment. In order to verify symptoms and conditions that cannot be evaluated in a standalone device, the Customer should ultimately evaluate and test the device installed in the Customer's product device.

●TUDI Semiconductor documentation is only allowed to be copied without any alteration of the content and with the relevant authorization.TUDI Semiconductor assumes no responsibility or liability for altered documents.

●TUDI Semiconductor is committed to becoming the preferred semiconductor brand for customers, and TUDI Semiconductor will strive to provide customers with better performance and better quallity products.