HSF

SPECIFICATIONS
Rated Current:3AMP
Contact Resistance:50mΩ Max
Withstand Voltage:1000VAC for 1 minute
Insulation Resistance:1000MΩ Min
Operation Temperature:−20°c to +85°c
Mating force:1.96N Max
Un−mating force:0.49N Min

Contact Material:Copper Alloy
Contact Plating:Au Over Ni
Housing Materials: PBT UL94V−0

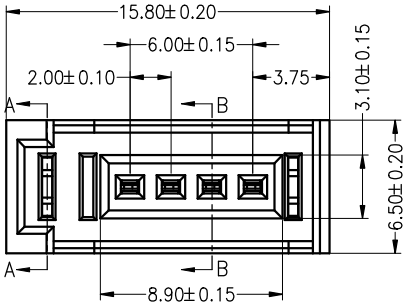

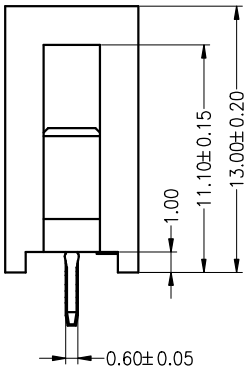

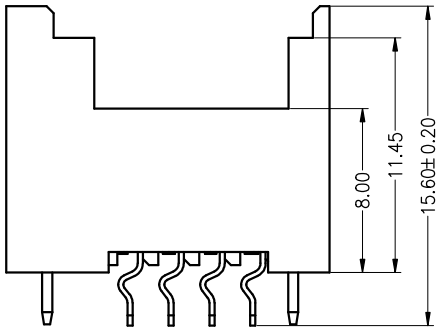

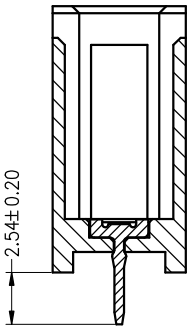

A−A SECTION

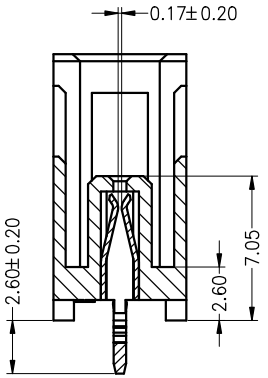

B−B SECTION

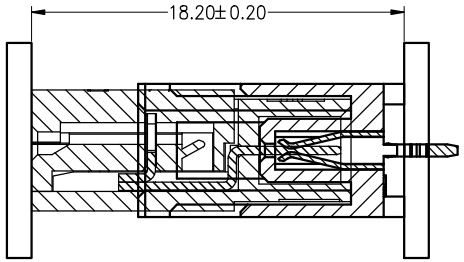

Mating Draw (Ref)

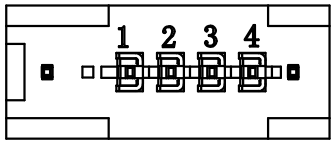

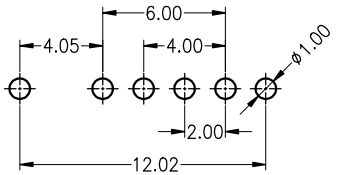

P.C.B Layout

				OPERATION		DRAW	zhouqiyong	2023.03.02	SCALE	FIT	JILN® 深圳市锦凌电子有限公司 SHENZHEN JINLING ELECTRONIC CO.,LTD Tel：86-755-2997-5806/5802 Fax：86-755-2997-5992
				X.X	±0.30				UNIT	mm	
				X.XX	±0.20	CHECK			SIZE	A4	PART NO. 8310−F14G1AB01
				X.XXX	±0.10				SHEET	1/1	
A0	2023.03.02	NEW DRAWING		Angle	±3°	APPROVE			PROJ.		TITLE: E−CON 4P TYPE−A Female Connectors
REV	DATE	MODIFICATION DESCRIPTION	CHANGE	DIM	TOL						