BORN SEMICONDUCTOR

ESD5Z7.0T1G

ESD Protection Diode

Features

- 350Watts peak pulse power (tp = 8/20μs)
- Unidirectional configurations
- Solid-state silicon-avalanche technology
- Low clamping Voltage
- Low leakage current
- Protection one data/power line
- IEC 61000-4-2 ±30kV contact ; ±30kV air
- IEC 61000-4-4 (EFT) 40A (5/50ns)
- IEC 61000-4-5 (Lightning) 23A (8/20μs)

Package

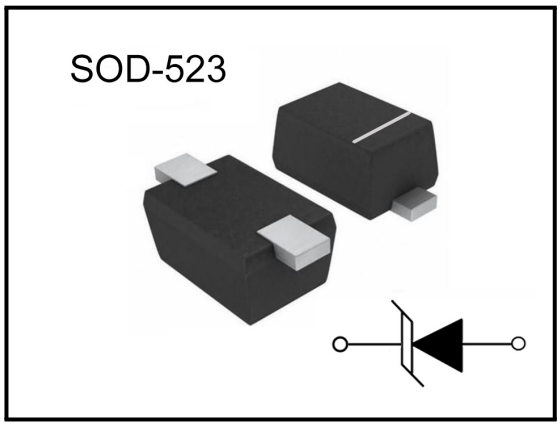

Applications

- Microprocessor based equipment
- Personal Digital Assistants (PDA's)
- Notebooks, Desktops, and Servers
- Portable Instrumentation
- Pagers Peripherals

Mechanical Characteristics

- SOD-523 package
- Molding compound flammability rating: UL 94V-0
- Packaging: Tape and Reel
- RoHS/WEEE Compliant

Marking

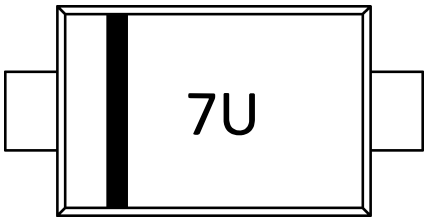

Ordering information

Order code	Package	Base qty	Delivery mode
ESD5Z7.0T1G	SOD-523	5k	Tape and reel

BORN SEMICONDUCTOR , INC. ALL RIGHT RESERVED

Specifications are subject to change without notice.
Please refer to http://*www.born-tw.com* for current information.

Revision: 2022-Jan-1-A

ESD5Z7.0T1G

ESD Protection Diode

Electrical Parameters (T_A = 25°C unless otherwise noted)

Symbol	Parameter
I_{PP}	Maximum Reverse Peak Pulse Current
V_C	Clamping Voltage @ I_{PP}
V_{RWM}	Peak Reverse Working Voltage
I_R	Reverse Leakage Current @ V_{RWM}
V_{BR}	Breakdown Voltage @ I_T
I_T	Test Current

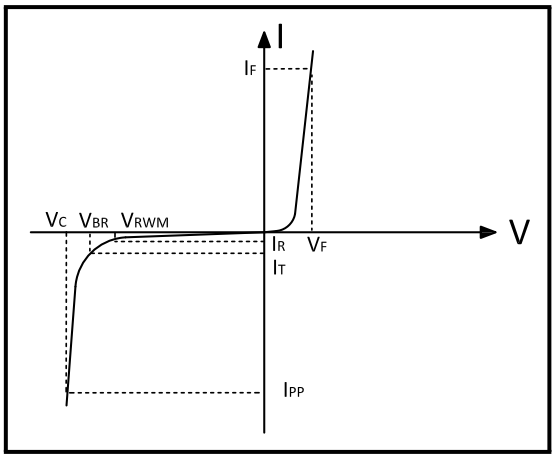

Note:8/20us pulse Waveform.

Absolute Maximum Rating

Rating	Symber	Value	Units
Peak Pulse Power (tp =8/20μs)	P_{PP}	350	Watts
Peak Pulse Current (tp =8/20μs)	I_{PP}	23	A
ESD per IEC 61000-4-2 (Air) ESD per IEC 61000-4-2 (Contact)	V_{ESD}	30 30	KV
Lead Soldering Temperature	T_L	260(10seconds)	°C
Junction Temperature	T_J	-55 to + 150	°C
Storage Temperature	T_{stg}	-55 to + 150	°C

Electrical Characteristics

Parameter	Symber	Conditions	Min	Typical	Max	Units
Reverse Stand-Off Voltage	V_{RWM}	–	–	–	7.0	V
Reverse Breakdown Voltage	V_{BR}	I_T=1mA	7.5	9.0	11.0	V
Reverse Leakage Current	I_R	V_{RWM}=7V,T=25°C	–	–	0.5	uA
Clamping Voltage	V_C	I_{PP}=23A, tp =8/20us	–	13	16	V
Junction Capacitance	C_j	V_R=0V,f=1MHZ	–	135	150	pF

BORN SEMICONDUCTOR , INC. ALL RIGHT RESERVED

Specifications are subject to change without notice.
Please refer to http://*www.born-tw.com* for current information.

ESD5Z7.0T1G

ESD Protection Diode

Typical Characteristics

Figure 1: Peak Pulse Power vs. Pulse Time

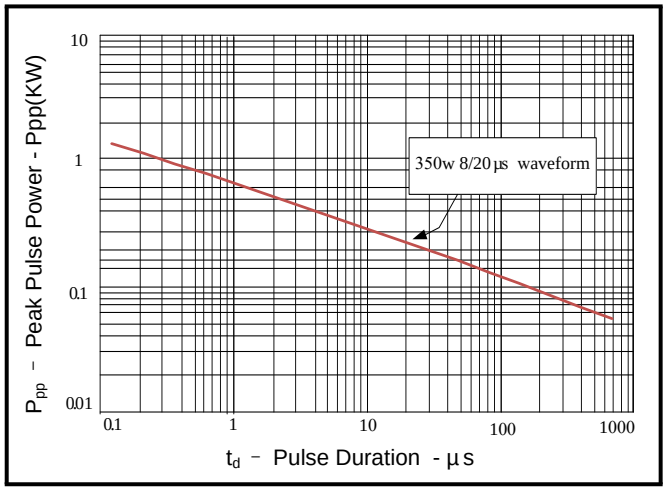

Figure 2: Power Derating Curve

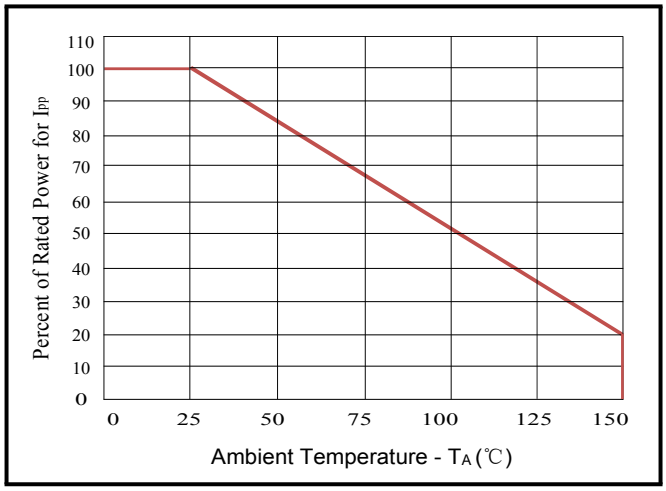

Figure 3: Pulse Waveform

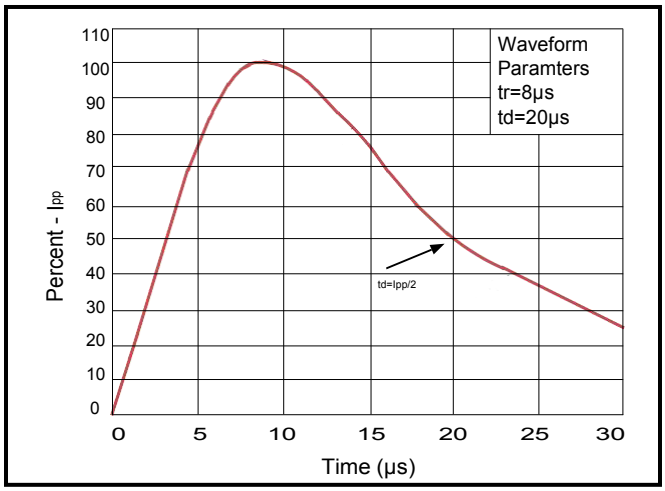

Figure 4: Clamping Voltage vs. I_{PP}

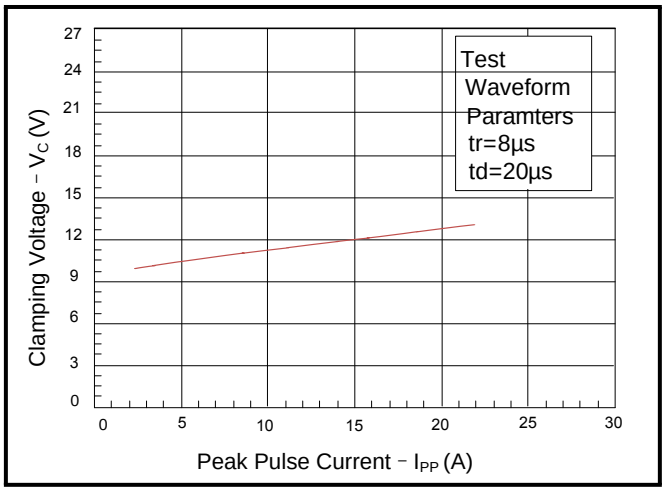

BORN SEMICONDUCTOR , INC. ALL RIGHT RESERVED

Specifications are subject to change without notice.
Please refer to http://www.born-tw.com for current information.

ESD5Z7.0T1G

ESD Protection Diode

Outline Drawing – SOD-523

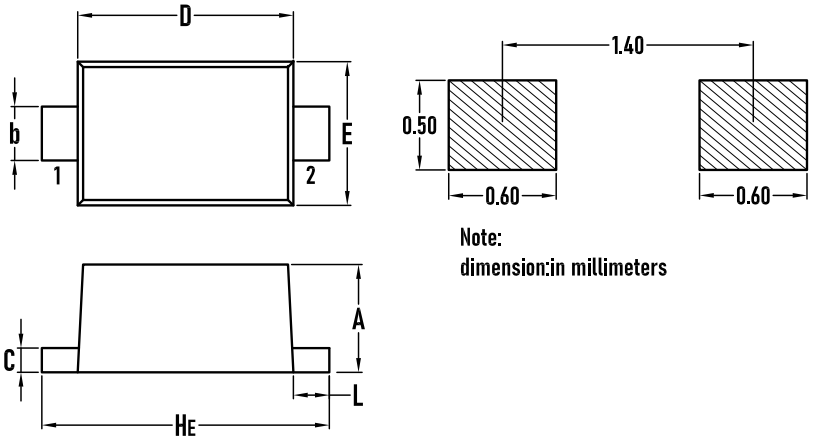

SYMBOL	MILLIMETER		INCHES	
	MIN.	MAX.	MIN.	MAX.
A	0.50	0.70	0.020	0.028
b	0.25	0.35	0.010	0.014
C	0.07	0.20	0.0028	0.0079
D	1.10	1.30	0.043	0.051
E	0.70	0.90	0.028	0.035
H_E	1.50	1.70	0.059	0.067
L	0.15	0.25	0.006	0.010

Packaging Tape - SOD-523

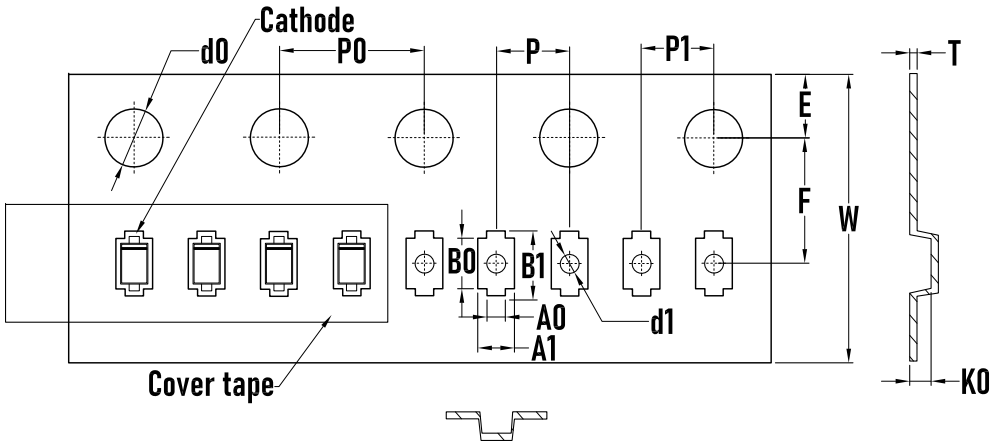

SYMBOL	MILLIMETER
A0	0.50±0.10
A1	1.00±0.10
B0	1.30±0.10
B1	1.80±0.10
d0	1.55±0.10
d1	0.50±0.05
E	1.75±0.10
F	3.50±0.10
K0	0.65±0.10
P	2.00±0.10
P0	4.00±0.10
P1	2.00±0.10
W	8.00±0.30
T	0.2 ±0.05

Packaging Reel

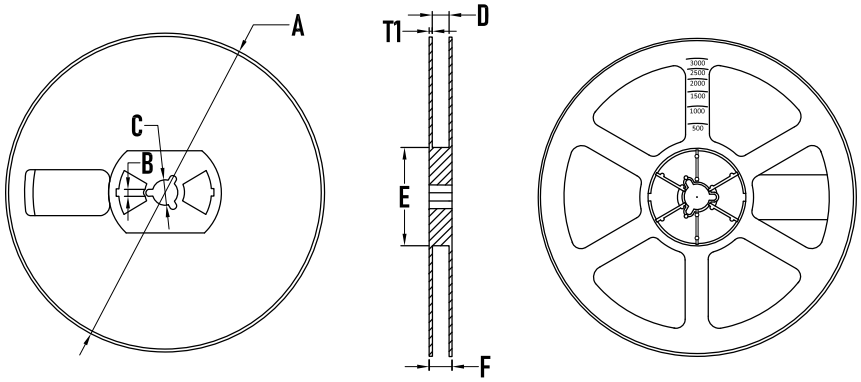

SYMBOL	MILLIMETER
A	177.8±0.2
B	2.7±0.2
C	13.5±0.2
D	9.6±0.3
E	54.5±0.2
F	12.3±0.3
T1	1.0±0.2
Quantity	5000PCS

BORN SEMICONDUCTOR , INC. ALL RIGHT RESERVED

Specifications are subject to change without notice.
Please refer to http://*www.born-tw.com* for current information.

Revision: 2022-Jan-1-A