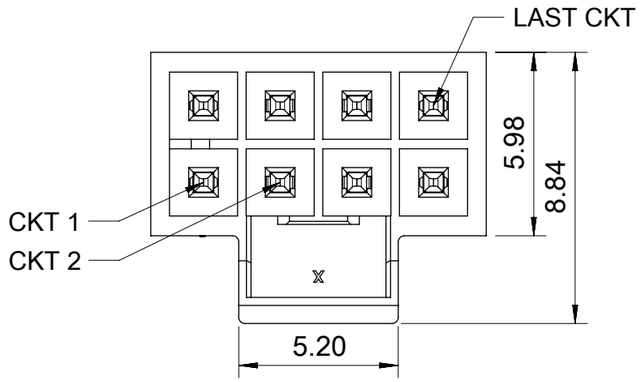

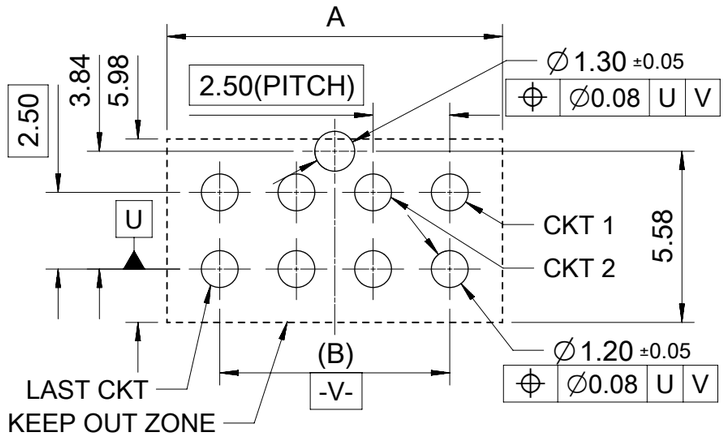

RECOMMENDED PCB(CONNECTOR SIDE VIEW)
THICKNESS=1.6 TO 2.4 MM

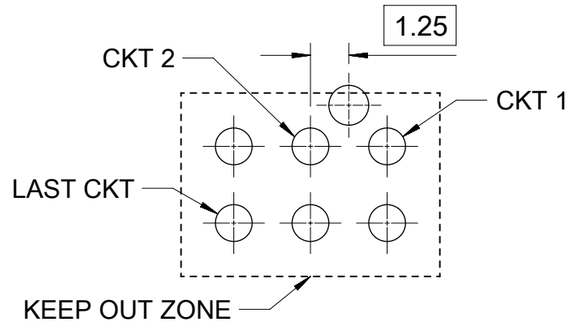

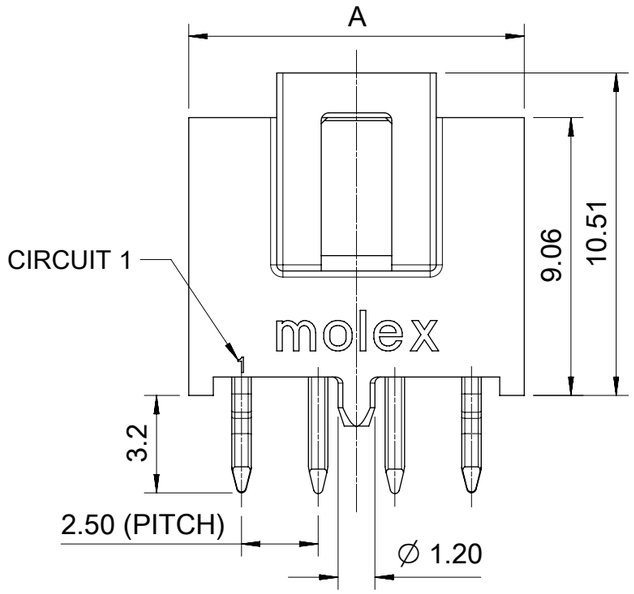

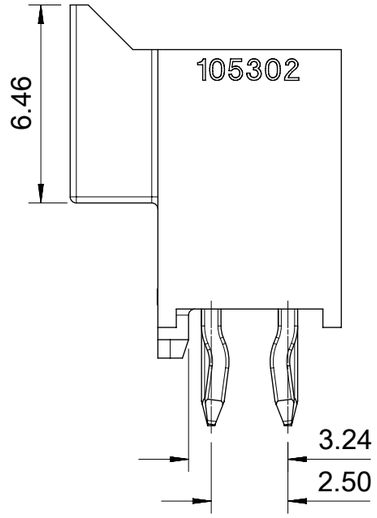

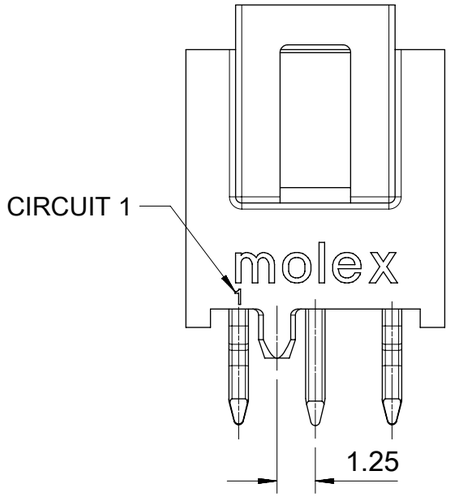

ONLY FOR CKT 6, 10, 14
OTHER DIMENSIONS REFER TO LEFT VIEWS.

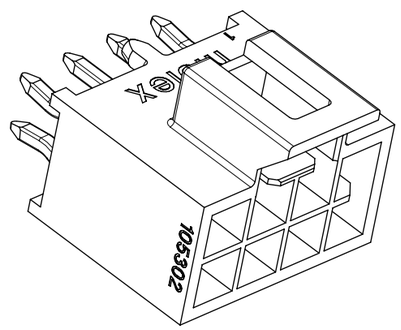

THIS DRAWING CONTAINS INFORMATION THAT IS PROPRIETARY TO MOLEX ELECTRONIC TECHNOLOGIES, LLC AND SHOULD NOT BE USED WITHOUT WRITTEN PERMISSION

DIMENSION UNITS	mm
SCALE	5:1
GENERAL TOLERANCES (UNLESS SPECIFIED)	
ANGULAR TOL ±	3.0 °
4 PLACES ±	
3 PLACES ±	0.1
2 PLACES ±	0.2
1 PLACE ±	0.3
0 PLACES ±	
DRAFT WHERE APPLICABLE MUST REMAIN WITHIN DIMENSIONS	

CURRENT REV DESC:

EC NO: 749038
DRWN: GLLI 2023/05/10
CHK'D: XQZHANG 2023/05/25
APPR: XQZHANG 2023/05/25

INITIAL REVISION:
DRWN: GLLI 2014/03/21
APPR: AYIN 2015/04/08

THIRD ANGLE PROJECTION | DRAWING: A3-SIZE | SERIES: 105310

molex

HEADER OF NANO-FIT, D/R, KINK, VERTICAL POWER CONNECTOR

PRODUCT CUSTOMER DRAWING

DOCUMENT NUMBER	DOC TYPE	DOC PART	REVISION
SD-105310-100	PSD	000	H1

MATERIAL NUMBER	CUSTOMER	SHEET NUMBER
	GENERAL MARKET	1 OF 5

DOCUMENT STATUS	P1	RELEASE DATE	2023/05/25 00:11:27

FORMAT: master_format-A3
REVISION: J1
DATE: 2021/05/06

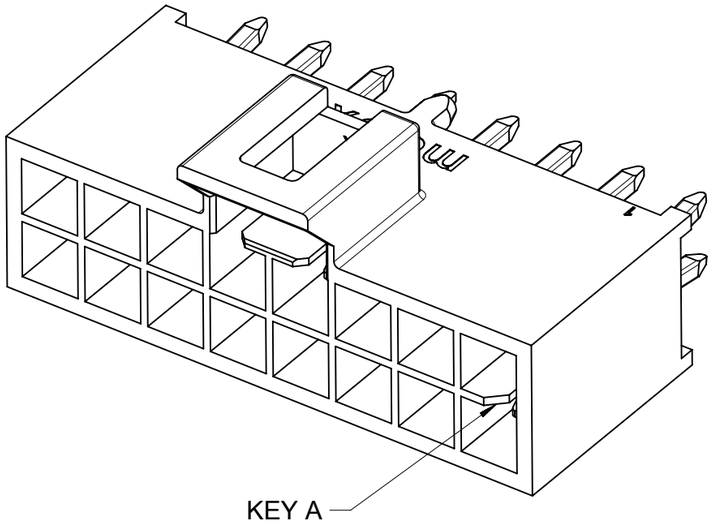

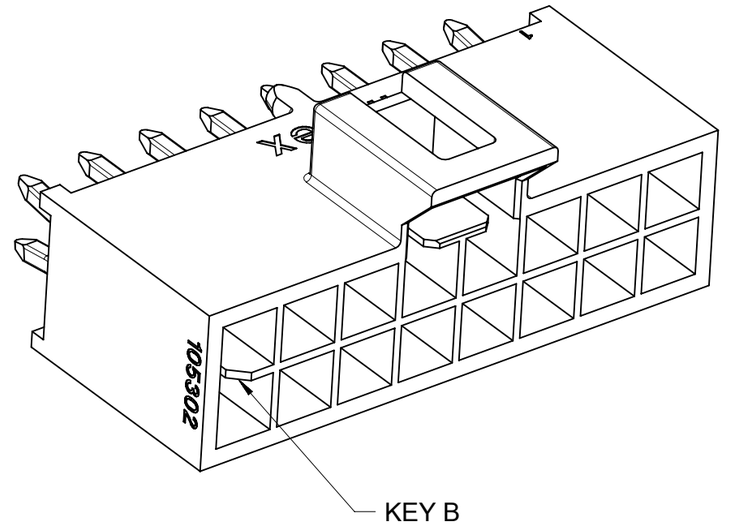

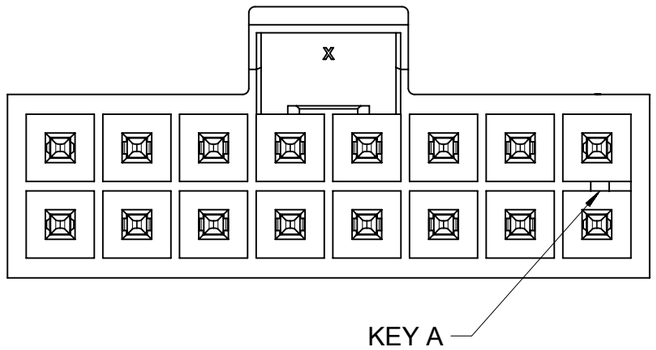

BLACK

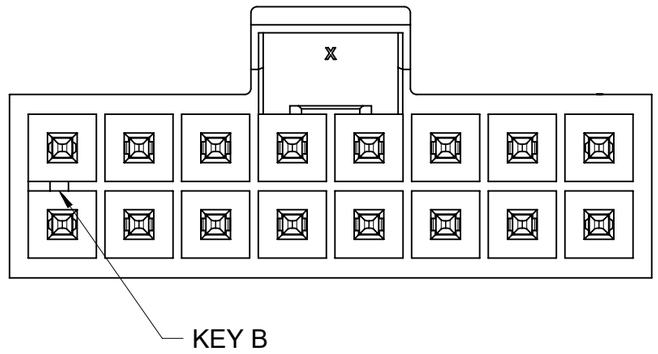

NATURAL

COLOR OPTION

THIS DRAWING CONTAINS INFORMATION THAT IS PROPRIETARY TO MOLEX ELECTRONIC TECHNOLOGIES, LLC AND SHOULD NOT BE USED WITHOUT WRITTEN PERMISSION

DIMENSION UNITS	SCALE
mm	5:1

GENERAL TOLERANCES (UNLESS SPECIFIED)	
ANGULAR TOL	± 3.0 °
4 PLACES	±
3 PLACES	± 0.1
2 PLACES	± 0.2
1 PLACE	± 0.3
0 PLACES	±

DRAFT WHERE APPLICABLE MUST REMAIN WITHIN DIMENSIONS

CURRENT REV DESC:

EC NO: 749038
DRWN: GLLI 2023/05/10
CHK'D: XQZHANG 2023/05/25
APPR: XQZHANG 2023/05/25

INITIAL REVISION:
DRWN: GLLI 2014/03/21
APPR: AYIN 2015/04/08

molex

HEADER OF NANO-FIT, D/R, KINK, VERTICAL POWER CONNECTOR

PRODUCT CUSTOMER DRAWING

DOCUMENT NUMBER	DOC TYPE	DOC PART	REVISION
SD-105310-100	PSD	000	H1

THIRD ANGLE PROJECTION	DRAWING	SERIES	MATERIAL NUMBER	CUSTOMER	SHEET NUMBER
	A3-SIZE	105310		GENERAL MARKET	2 OF 5

DOCUMENT STATUS	P1	RELEASE DATE	2023/05/25 00:11:27

FORMAT: master-tb-prod-A3
REVISION: J1
DATE: 2021/05/01

PART NUMBER	DIM 'A'	DIM 'B'	CKT SIZE	PLATING	LUBE
105310-1104	5.94	2.50	4	TIN	NO
105310-1106	8.44	5.00	6		
105310-1108	10.94	7.50	8		
105310-1110	13.44	10.00	10		
105310-1112	15.94	12.50	12		
105310-1114	18.44	15.00	14		
105310-1116	20.94	17.50	16		
105310-1204	5.94	2.50	4	GOLD 0.38	
105310-1206	8.44	5.00	6		
105310-1208	10.94	7.50	8		
105310-1210	13.44	10.00	10		
105310-1212	15.94	12.50	12		
105310-1214	18.44	15.00	14		
105310-1216	20.94	17.50	16		
105310-1304	5.94	2.50	4	GOLD 0.76	
105310-1306	8.44	5.00	6		
105310-1308	10.94	7.50	8		
105310-1310	13.44	10.00	10		
105310-1312	15.94	12.50	12		
105310-1314	18.44	15.00	14		
105310-1316	20.94	17.50	16		
105310-1404	5.94	2.50	4	GOLD 0.76	YES
105310-1406	8.44	5.00	6		
105310-1408	10.94	7.50	8		
105310-1410	13.44	10.00	10		
105310-1412	15.94	12.50	12		
105310-1414	18.44	15.00	14		
105310-1416	20.94	17.50	16		
COLOR: BLACK					

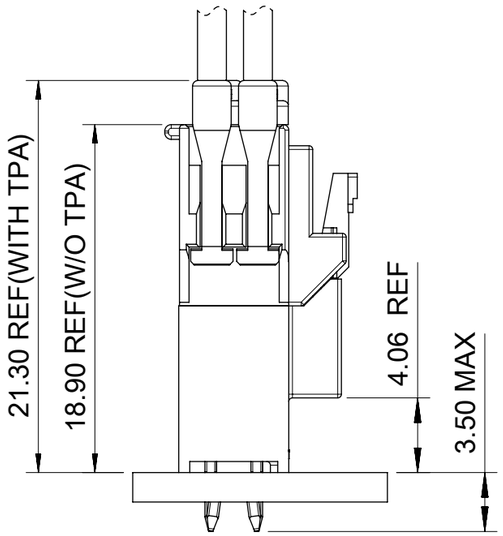

105310- * * * *

- CIRCUIT SIZE
- PLATING OPTION
  - 1 - TIN
  - 2 - GOLD 0.38
  - 3 - GOLD 0.76
  - 4 - GOLD AND LUBE
  - 5 - GOLD 0.025
- COLOR OPTION
  - 1 - BLACK
  - 2 - NATURAL

PART NUMBER	DIM 'A'	DIM 'B'	CKT SIZE	PLATING	LUBE
105310-2104	5.94	2.50	4	TIN	NO
105310-2106	8.44	5.00	6		
105310-2108	10.94	7.50	8		
105310-2110	13.44	10.00	10		
105310-2112	15.94	12.50	12		
105310-2114	18.44	15.00	14		
105310-2116	20.94	17.50	16		
105310-2204	5.94	2.50	4	GOLD 0.38	
105310-2206	8.44	5.00	6		
105310-2208	10.94	7.50	8		
105310-2210	13.44	10.00	10		
105310-2212	15.94	12.50	12		
105310-2214	18.44	15.00	14		
105310-2216	20.94	17.50	16		
105310-2304	5.94	2.50	4	GOLD 0.76	
105310-2306	8.44	5.00	6		
105310-2308	10.94	7.50	8		
105310-2310	13.44	10.00	10		
105310-2312	15.94	12.50	12		
105310-2314	18.44	15.00	14		
105310-2316	20.94	17.50	16		
105310-2404	5.94	2.50	4	GOLD 0.76	YES
105310-2406	8.44	5.00	6		
105310-2408	10.94	7.50	8		
105310-2410	13.44	10.00	10		
105310-2412	15.94	12.50	12		
105310-2414	18.44	15.00	14		
105310-2416	20.94	17.50	16		
COLOR: NATURAL					

PART NUMBER	DIM 'A'	DIM 'B'	CKT SIZE	PLATING	LUBE
105310-1504	5.94	2.50	4	GOLD 0.025	NO
105310-1506	8.44	5.00	6		
105310-1508	10.94	7.50	8		
105310-1510	13.44	10.00	10		
105310-1512	15.94	12.50	12		
105310-1514	18.44	15.00	14		
105310-1516	20.94	17.50	16		
COLOR: BLACK					

PART NUMBER	DIM 'A'	DIM 'B'	CKT SIZE	PLATING	LUBE
105310-2504	5.94	2.50	4	GOLD 0.025	NO
105310-2506	8.44	5.00	6		
105310-2508	10.94	7.50	8		
105310-2510	13.44	10.00	10		
105310-2512	15.94	12.50	12		
105310-2514	18.44	15.00	14		
105310-2516	20.94	17.50	16		
COLOR: NATURAL					

THIS DRAWING CONTAINS INFORMATION THAT IS PROPRIETARY TO MOLEX ELECTRONIC TECHNOLOGIES, LLC AND SHOULD NOT BE USED WITHOUT WRITTEN PERMISSION

DIMENSION UNITS	SCALE
mm	5:1

GENERAL TOLERANCES (UNLESS SPECIFIED)

ANGULAR TOL	± 3.0 °
4 PLACES	±
3 PLACES	± 0.1
2 PLACES	± 0.2
1 PLACE	± 0.3
0 PLACES	±

DRAFT WHERE APPLICABLE MUST REMAIN WITHIN DIMENSIONS

CURRENT REV DESC:

EC NO: 749038
DRWN: GLLI 2023/05/10
CHK'D: XQZHANG 2023/05/25
APPR: XQZHANG 2023/05/25

INITIAL REVISION:
DRWN: GLLI 2014/03/21
APPR: AYIN 2015/04/08

molex

HEADER OF NANO-FIT, D/R, KINK, VERTICAL POWER CONNECTOR

PRODUCT CUSTOMER DRAWING

DOCUMENT NUMBER	DOC TYPE	DOC PART	REVISION
SD-105310-100	PSD	000	H1

THIRD ANGLE PROJECTION	DRAWING	SERIES	MATERIAL NUMBER	CUSTOMER	SHEET NUMBER
	A3-SIZE	105310		GENERAL MARKET	3 OF 5

DOCUMENT STATUS	P1	RELEASE DATE	2023/05/25 00:11:27

FORMAT: master_Portrait-A3
REVISION: J1
DATE: 2021/05/06

	4 CKT	6 CKT	8 CKT	10 CKT
BLACK	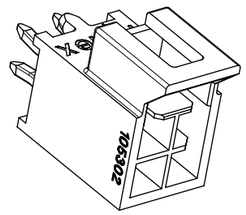	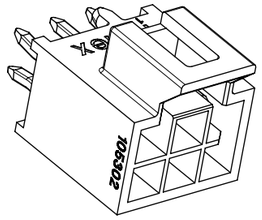	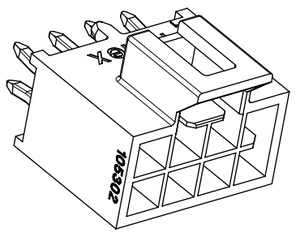	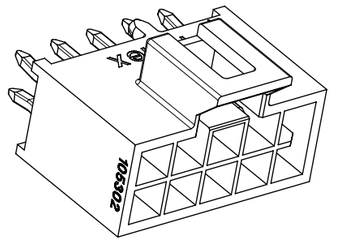
NATURAL	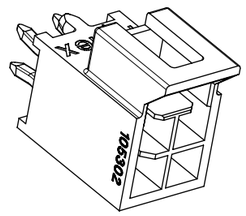	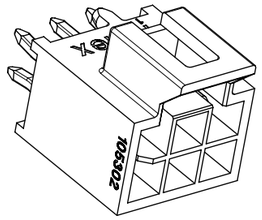	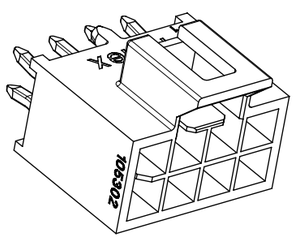	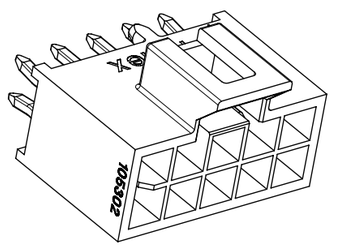

	12 CKT	14 CKT	16 CKT
BLACK	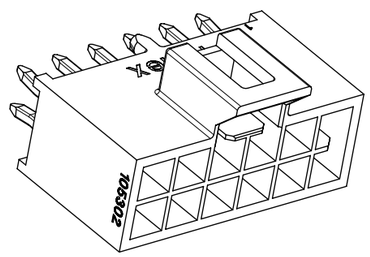	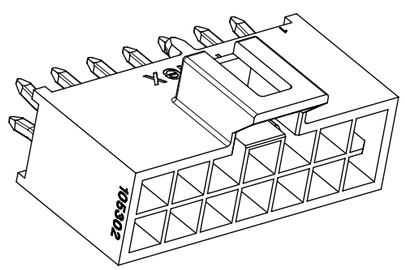	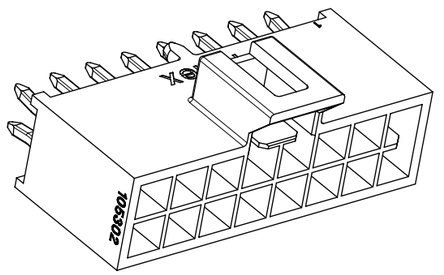
NATURAL	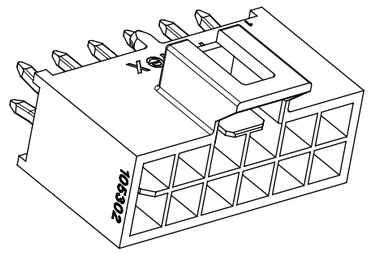	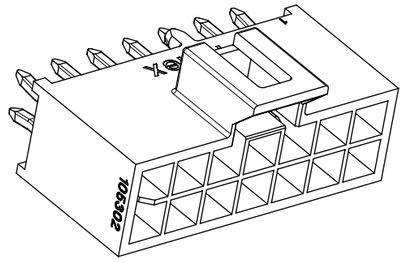	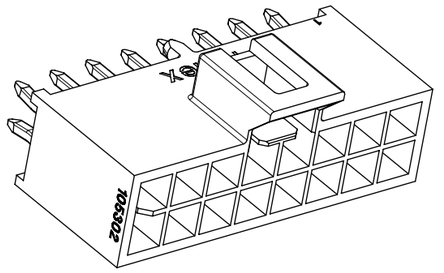

THIS DRAWING CONTAINS INFORMATION THAT IS PROPRIETARY TO MOLEX ELECTRONIC TECHNOLOGIES, LLC AND SHOULD NOT BE USED WITHOUT WRITTEN PERMISSION

DIMENSION UNITS	mm
SCALE	3:1
GENERAL TOLERANCES (UNLESS SPECIFIED)	
ANGULAR TOL ±	3.0 °
4 PLACES ±	
3 PLACES ±	0.1
2 PLACES ±	0.2
1 PLACE ±	0.3
0 PLACES ±	
DRAFT WHERE APPLICABLE MUST REMAIN WITHIN DIMENSIONS	

CURRENT REV DESC:

EC NO: 749038
DRWN: GLLI 2023/05/10
CHK'D: XQZHANG 2023/05/25
APPR: XQZHANG 2023/05/25

INITIAL REVISION:
DRWN: GLLI 2014/03/21
APPR: AYIN 2015/04/08

THIRD ANGLE PROJECTION | DRAWING: A3-SIZE | SERIES: 105310

molex

HEADER OF NANO-FIT, D/R, KINK, VERTICAL POWER CONNECTOR

PRODUCT CUSTOMER DRAWING

DOCUMENT NUMBER	DOC TYPE	DOC PART	REVISION
SD-105310-100	PSD	000	H1

MATERIAL NUMBER	CUSTOMER	SHEET NUMBER
	GENERAL MARKET	4 OF 5

DOCUMENT STATUS	P1	RELEASE DATE	2023/05/25 00:11:27

FORMAT: master-tb-prod-A3
REVISION: J1
DATE: 2021/05/01

NOTES FOR ALL PARTS	
1> MATERIAL: HOUSING: LCP, UL 94V-0; TERMINAL: BRASS. 2> PLATING FINISHED: TERMINAL: CONTACT AREA: a. REFLOWED MATTE TIN 1.5MICRONS MIN; b. GOLD 0.38 MICRONS MIN; c. GOLD 0.76 MICRONS MIN. d. GOLD 0.025 MICRONS MIN. SOLDER AREA: TIN 1.5 MICRONS MIN, UNDER PLATING NICKEL 1.25 MICRONS MIN. SOLDER CLIP: TIN 2.5 MICRONS MIN, UNDER PLATING NICKEL 1.25 MICRONS MIN. 3> PRODUCT SPECIFICATION: PS-105300-100.	4> PACKAGE: TRAY, PK-105309-100. 5> ALL COMPONENTS AND PRODUCT COMPLIANT TO RoHS DIRECTIVE 2011/65/EU AND ELV DIRECTIVE 2000/53/EC. 6> PRODUCT MATE WITH SERIES OF 105308(RECEPTACLE), 105300(CRIMP TERMINAL). 7> PARTS CONFORM TO CLASS 'B'REQUIREMENTS OF COSMETIC SPECIFICATION PS-45499-002. 8> DISCOLORATION IN THE BANDOLIER PIN CARRIER AREA OF THE PIN IS INHERENT TO THE PLATING PROCESS AND IS DUE TO THE MASKING DEFECT OF THE CARRIER, THIS DISCOLORATION IS IN A NON-FUNCTION AREA OF THE PIN AND WILL NOT AFFECT THE PERFORMANCE OF THE HEADER ASSEMBLY.

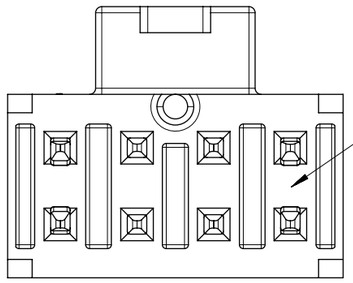

IF ANY NUMBER MARK APPEARS ON THIS SURFACE, PLEASE DISREGARD IT, IT IS NO ANY FUCTION AND NO ANY RELATION TO PIN NUMBER, IT IS JUST FOR MOLDING IDENDIFICATION.

THIS DRAWING CONTAINS INFORMATION THAT IS PROPRIETARY TO MOLEX ELECTRONIC TECHNOLOGIES, LLC AND SHOULD NOT BE USED WITHOUT WRITTEN PERMISSION

DIMENSION UNITS	SCALE
mm	1:1

GENERAL TOLERANCES (UNLESS SPECIFIED)	
ANGULAR TOL	± 3.0 °
4 PLACES	±
3 PLACES	± 0.1
2 PLACES	± 0.2
1 PLACE	± 0.3
0 PLACES	±

DRAFT WHERE APPLICABLE MUST REMAIN WITHIN DIMENSIONS

CURRENT REV DESC:

EC NO: 749038
DRWN: GLLI 2023/05/10
CHK'D: XQZHANG 2023/05/25
APPR: XQZHANG 2023/05/25

INITIAL REVISION:
DRWN: GLLI 2014/03/21
APPR: AYIN 2015/04/08

molex

HEADER OF NANO-FIT, D/R, KINK, VERTICAL POWER CONNECTOR

PRODUCT CUSTOMER DRAWING

DOCUMENT NUMBER	DOC TYPE	DOC PART	REVISION
SD-105310-100	PSD	000	H1

THIRD ANGLE PROJECTION	DRAWING	SERIES	MATERIAL NUMBER	CUSTOMER	SHEET NUMBER
	A3-SIZE	105310		GENERAL MARKET	5 OF 5

DOCUMENT STATUS	P1	RELEASE DATE	2023/05/25 00:11:27

FORMAT: master-tb-prod-A3
REVISION: J1
DATE: 2021/05/01