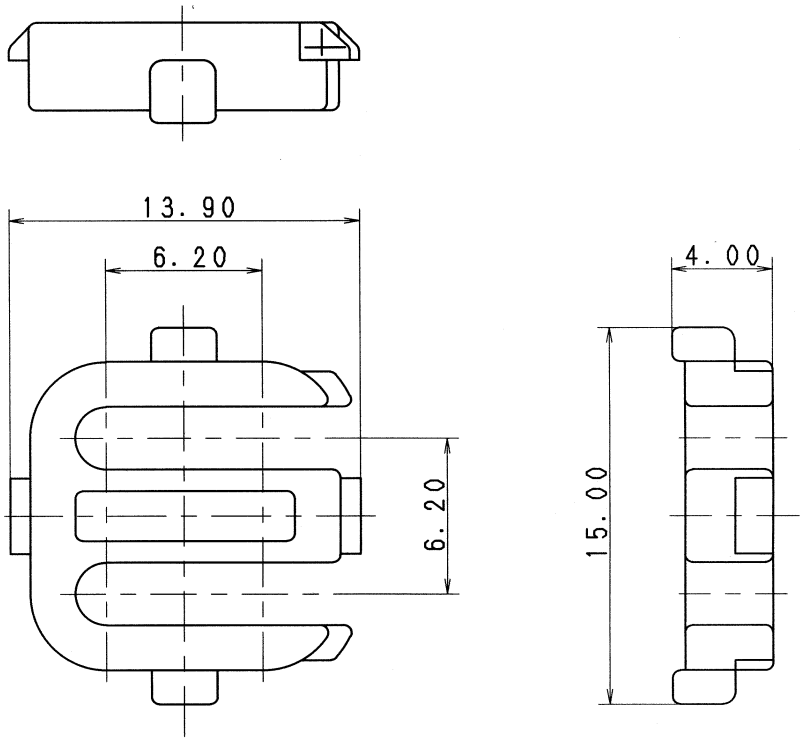

⚠注記

1. 取付可能品番： 7222-7444-40 ETC.,
7123-7444 ETC.

⚠NOTE

1. INSTALLATION PART NO. : 7222-7444-40 ETC.,
7123-7444 ETC.

ISSUE MARK

LET	DATE	REVISION RECORD	NO.	CHKD
⚠	05/10/19	ADDED GENERAL TOLERANCE, ETC.	C05-ZE05	T. K
	87/04/11	NEW	7MC-0179	S. K

⚠GENERAL TOLERANCE

	10MAX	50MAX	100MAX	250MAX	2500VR	ANGLE	ECCENT
A	±0.15	±0.2	±0.3	±0.5	±0.75	±30′	0.1
B	±0.2	±0.3	±0.55	±0.95	±1.4	±30′	0.1
Ⓒ	±0.3	±0.5	±0.8	±1.4	±2	±30′	0.15

SPECIFIED

MASS g

CUSTOMER

CUSTOMER PART NO.

CUSTOMER DWG NO.

OFFICE

TRIAL PART NO.

VENDOR

VENDOR NO.

DWG TYPE	DWG SOURCE	DWG DATE	UNIT	SCL	ANGLE
R	NEW	87/04/11	mm	5:1	3

APPROVED	CHECKED	CHECKED	DESIGN	DRAWN
[signature]	[signature]	[signature]	YAMADA	O. DAR ROMEL GALIZA
'05.10.20	'05.10.20	'05.10.20	86/09/17	05/10/19

MATL. SPEC. PBT (BROWN)

TREAT. & FIN.

NAME SWP-TYPE CONNECTOR
REAR HOLDER 4P

PART NO. CH. CODE 7157-7815-80

DWG NO. 7157-7815-80:R

SET DWG NO.

YAZAKI CORPORATION