THIS DRAWING IS UNPUBLISHED. RELEASED FOR PUBLICATION 20
© COPYRIGHT 20 BY - ALL RIGHTS RESERVED.

2307072-1 AS SHOW

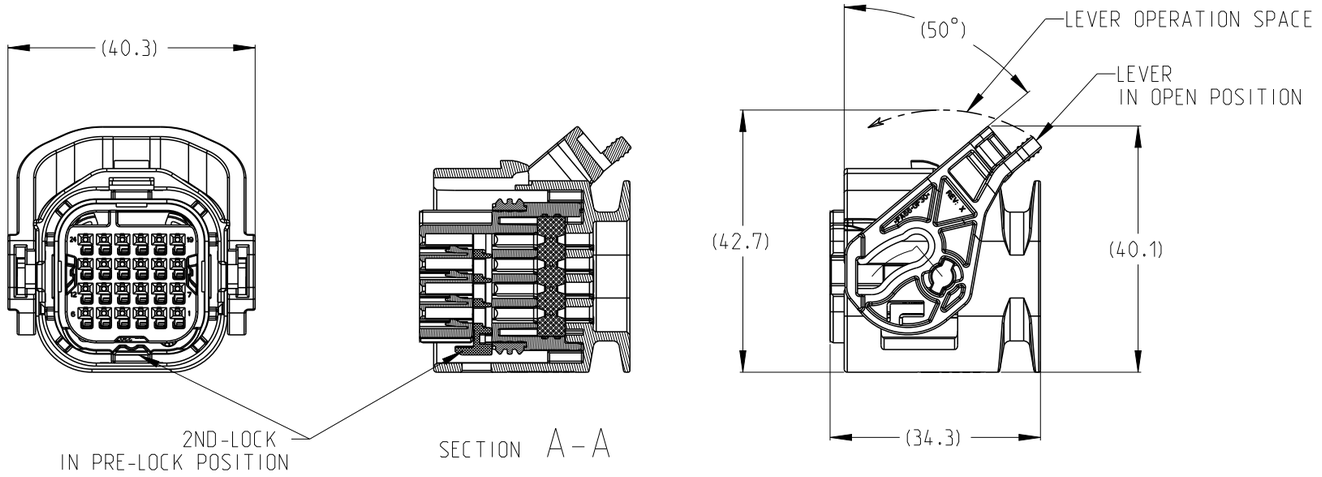

REVISIONS

P	LTR	DESCRIPTION	DATE	DWN	APVD
	A4	ECR-21-002162	22FEB2021	J.L	J.Z
	A5	ECR-22-126366	11JAN2022	D.Z	I.Y
	A6	ECN-22-173421	07SEP2022	W.H	J.Z
	A7	ECN-25-316041	10APR2025	W.H	J.Z

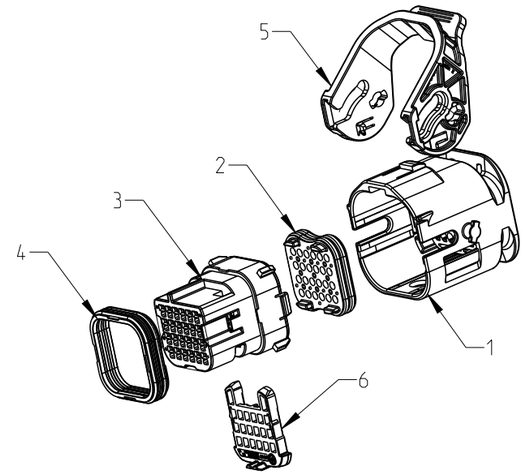

NOTES:

1. LEVER MUST BE IN OPEN POSITION FOR DELIVERY.
2. 2ND LOCK MUST BE IN PRE-LOCK POSITION FOR DELIVERY. 2ND LOCK MUST BE PUSHED IN END-LOCK POSITION AFTER TERMINAL ON SITE.
3. APPLICABLE MATING PARTS REFER TO TE PN 2305367.
4. APPLICABLE MCON 1.2 CLEAN BODY CONTACT SEE TABLE:

WIRE SIZE (mm^2)	TE CONTACT PN	INSULATION RANGE	REMARK
0.5~0.75	1670144	FLR Ø1.4~1.9mm	SEE DRAWING 1534326

PIN OUT CONFIGURATION

POS	1	2	3	4	5	6	7	8	9	10	11	12	13	14	15	16	17	18	19	20	21	22	23	24
2307072-1																								
2307072-2	X	X	X	X	X	X													X	X	X	X	X	X
2307072-3																X	X	X	X	X	X	X	X	X
2307072-4																						X		
2307072-5																	X	X	X	X	X	X	X	X
2307072-6			X	X													X	X	X	X	X	X	X	X
2307072-7	X	X			X	X													X	X	X	X	X	X
2307072-8						X							X				X		X				X	
2307072-9	X	X	X	X	X														X	X	X	X	X	X
1-2307072-1	X	X	X	X	X	X	X	X											X	X	X	X	X	X
A7 1-2307072-2			X	X	X										X	X	X							
TE PART NUMBER	X INDICATE THE CLOSED CAVITY																							

X-2307072-X	BASE HOUSING	PA66+GF30	BLACK	1
	FAMILY SEAL	SILICONE	ORANGE	2
	CAVITY BLOCK	PA66+GF35	BLACK	3
	O-RING	SILICONE	ORANGE	4
	LEVER	PA66+GF30	BLACK	5
	2ND LOCK	PA66+GF30	RED	6
TE ASSEMBLY PN	DESCRIPTION	MATERIAL	COLOR	ITEM

THIS DRAWING IS A CONTROLLED DOCUMENT.

DIMENSIONS: mm

TOLERANCES UNLESS OTHERWISE SPECIFIED:
0 PLC ±0.3
1 PLC ±0.3
2 PLC ±0.2
3 PLC ±
4 PLC ±
ANGLES ±2°

MATERIAL - -

FINISH - -

DWN R.TANG 02NOV2016
CHK SY.WANG 02NOV2016
APVD I.YIN 02NOV2016
PRODUCT SPEC 108-101524
APPLICATION SPEC -
WEIGHT -

TE Connectivity

NAME 24W MCON 1.2 PLUG ASSY.
-

SIZE	CAGE CODE	DRAWING NO	RESTRICTED TO
A3	-	C-2307072	-

CUSTOMER DRAWING | SCALE 1:1 | SHEET 1 OF 1 | REV A7