Littelfuse
Expertise Applied | Answers Delivered

Schottky Barrier Rectifier
MBRF20200CT, 2x 10A, 200V, ITO-220AB, Common Cathode

MBRF20200CT

RoHS

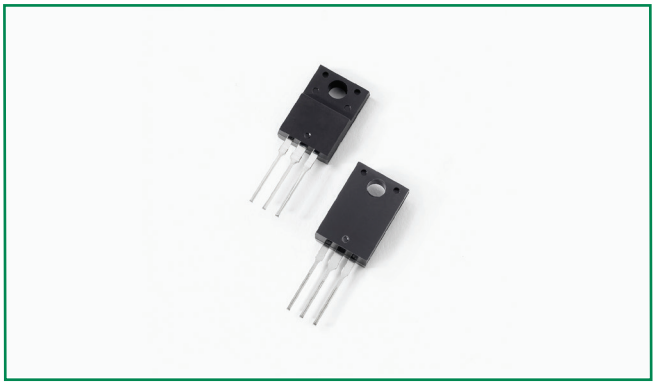

Pin out

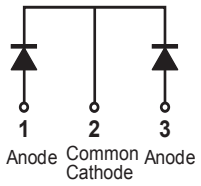

Description

Littelfuse MBR series Schottky Barrier Rectifier is designed to meet the general requirements of commercial applications by providing high temperature, low leakage and low V_F products.
It is suitable for high frequency switching mode power supply, free-wheeling diodes and polarity protection diodes.

Features

- High junction temperature capability
- Guard ring for enhanced ruggedness and long term reliability
- Low forward voltage drop
- High frequency operation
- Common cathode configuration in electrically isolated ITO-220AB package

Applications

- Switching mode power supply
- Free-wheeling diodes
- DC/DC converters
- Polarity protection diodes

Maximum Ratings

Parameters	Symbol	Test Conditions	Max	Unit
Peak Inverse Voltage	V_{RWM}	-	200	V
Average Forward Current	$I_{F(AV)}$	50% duty cycle @T_C = 105°C, rectangular wave form	10(per leg)	A
			20(per device)	
Peak Repetitive Forward Current (per leg)	I_{FRM}	Rated V_R, Square wave,20KHz, @T_C=90°C	20	A
Peak One Cycle Non-Repetitive Surge Current (per leg)	I_{FSM}	8.3 ms, half Sine pulse	150	A

Electrical Characteristics

Parameters	Symbol	Test Conditions	Max	Unit
Forward Voltage Drop (per leg) *	V_{F1}	@ 10A, Pulse, T_J = 25 °C	0.95	V
	V_{F2}	@ 10A, Pulse, T_J = 125 °C	0.85	
Reverse Current at DC condition (per leg)	I_{R1}	@V_R = rated V_R T_J = 25 °C	1.0	mA
Reverse Current (per leg) *	I_{R2}	@V_R = rated V_R T_J = 125 °C	50	
Junction Capacitance (per leg)	C_T	@V_R = 5V, T_C = 25 °C f_{SIG} = 1MHz	300	pF
Series Inductance (per leg)	L_S	Measured lead to lead 5 mm from package body	8.0	nH
Voltage Rate of Change	dv/dt		10,000	V/µs
RSM Isolation Voltage (t = 1.0 second, R. H. < =30%, T_A = 25 °C)	V_{ISO}	Clip mounting, the epoxy body away from the heatsink edge by more than 0.110" along the lead direction.	4500	V
		Clip mounting, the epoxy body is inside the heatsink.	3500	
		Screw mounting, the epoxy body is inside the heatsink.	1500	

* Pulse Width < 300µs, Duty Cycle <2%

©2015 Littelfuse, Inc
Specifications are subject to change without notice.
Revised:11/09/15

Schottky Barrier Rectifier
MBRF20200CT, 2x 10A, 200V, ITO-220AB, Common Cathode

Thermal-Mechanical Specifications

Parameters	Symbol	Test Conditions	Max	Unit
Junction Temperature	T_J		-55 to +175	°C
Storage Temperature	T_{stg}		-55 to +175	°C
Maximum Thermal Resistance Junction to Case (per leg)	R_{thJC}	DC operation	4.5	°C/W
Approximate Weight	wt		2	g
Case Style		ITO-220AB		

Figure 1: Typical Forward Characteristics

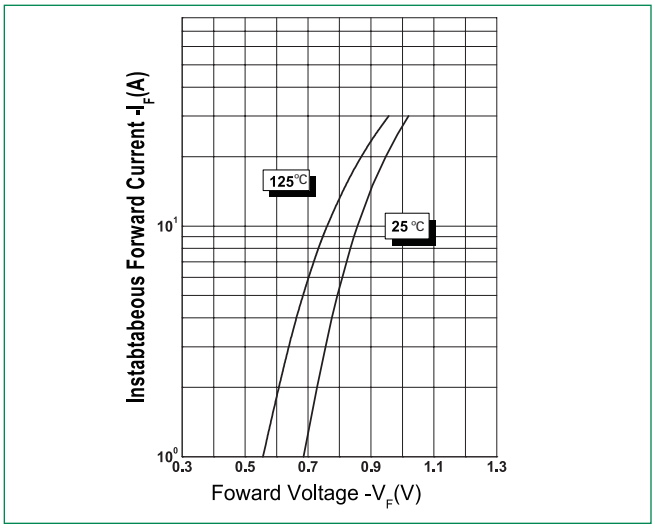

Figure 2: Typical Reverse Characteristics

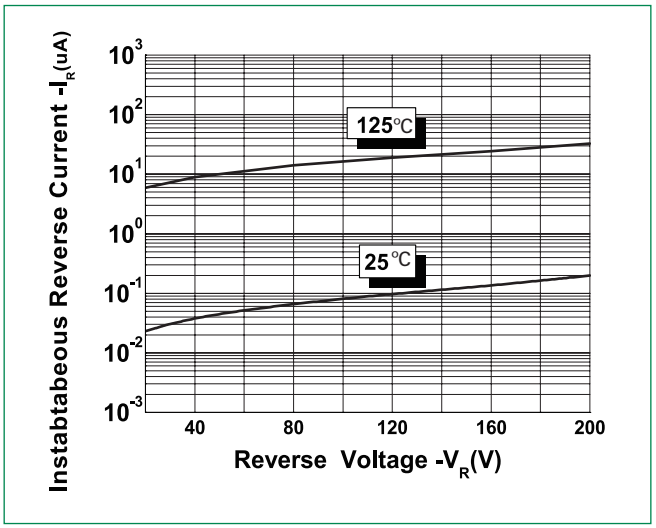

Figure 3: Typical Junction Capacitance

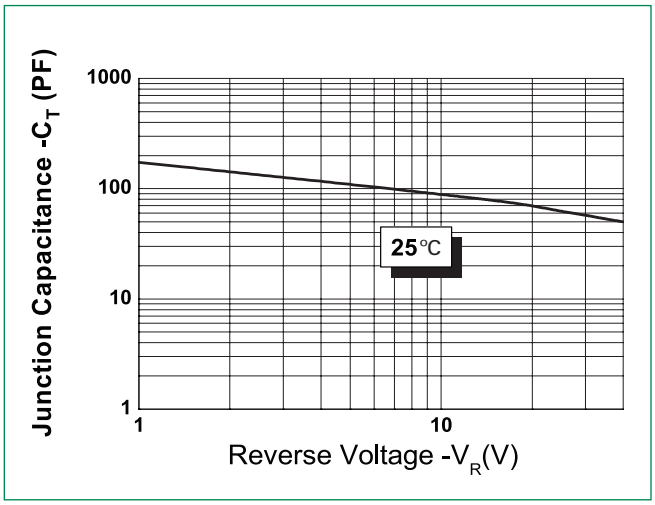

©2015 Littelfuse, Inc
Specifications are subject to change without notice.
Revised:11/09/15

Littelfuse
Expertise Applied | Answers Delivered

Schottky Barrier Rectifier
MBRF20200CT, 2x 10A, 200V, ITO-220AB, Common Cathode

Dimensions- ITO-220AB

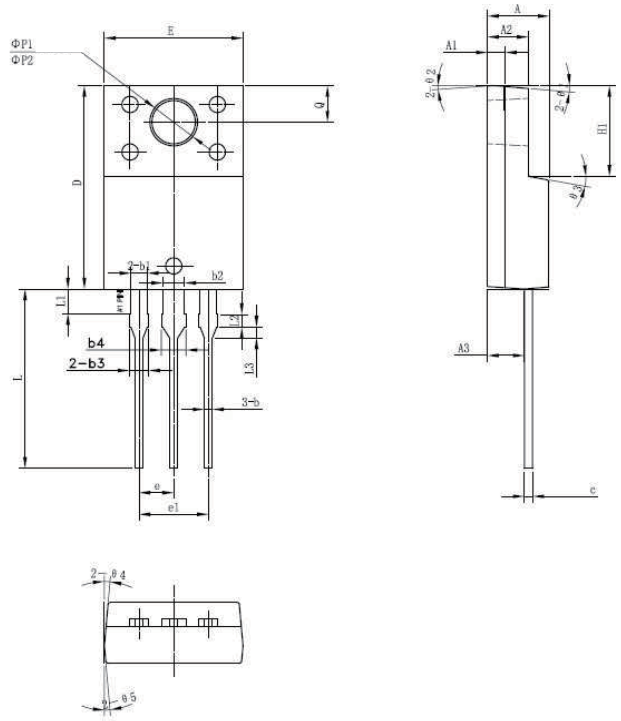

Symbol	Millimeters		
	Min	Typ	Max
A	4.30	4.50	4.70
A1	1.10	1.30	1.50
A2	2.80	3.00	3.20
A3	2.50	2.70	2.90
b	0.50	0.60	0.75
b1	1.10	1.20	1.35
b2	1.50	1.60	1.75
b3	1.20	1.30	1.45
b4	1.60	1.70	1.85
c	0.55	0.60	0.75
D	14.80	15.00	15.20
E	9.96	10.16	10.36
e		2.55	
e1		5.10	
H1	6.50	6.70	6.90
L	12.70	13.20	13.70
L1	1.60	1.80	2.00
L2	0.80	1.00	1.20
L3	0.60	0.80	1.00
ØP1	3.30	3.50	3.70
ØP2	2.99	3.19	3.39
Q	2.50	2.70	2.90
θ1		5°	
θ2		4°	
θ3		10°	
θ4		5°	
θ5		5°	

Packing Options

Part Number	Marking	Packing Mode	M.O.Q
MBRF20200CT	MBRF20200CT	50pcs / Tube	1000

Tube Specification

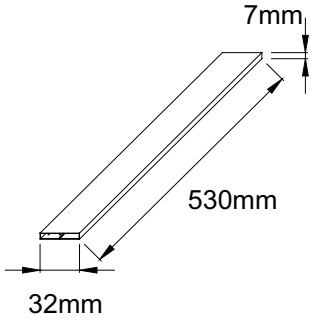

Part Numbering and Marking System

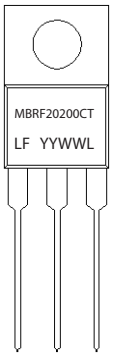

MBR	= Device Type
F	= Package type
20	= Forward Current (20A)
200	= Reverse Voltage (200V)
CT	= Configuration
LF	= Littelfuse
YY	= Year
WW	= Week
L	= Lot Number

©2015 Littelfuse, Inc
Specifications are subject to change without notice.
Revised:11/09/15